THE NATIONAL 911 PROGRAM

Next Generation 911 (NG911) Interstate Playbook

CHAPTER 2

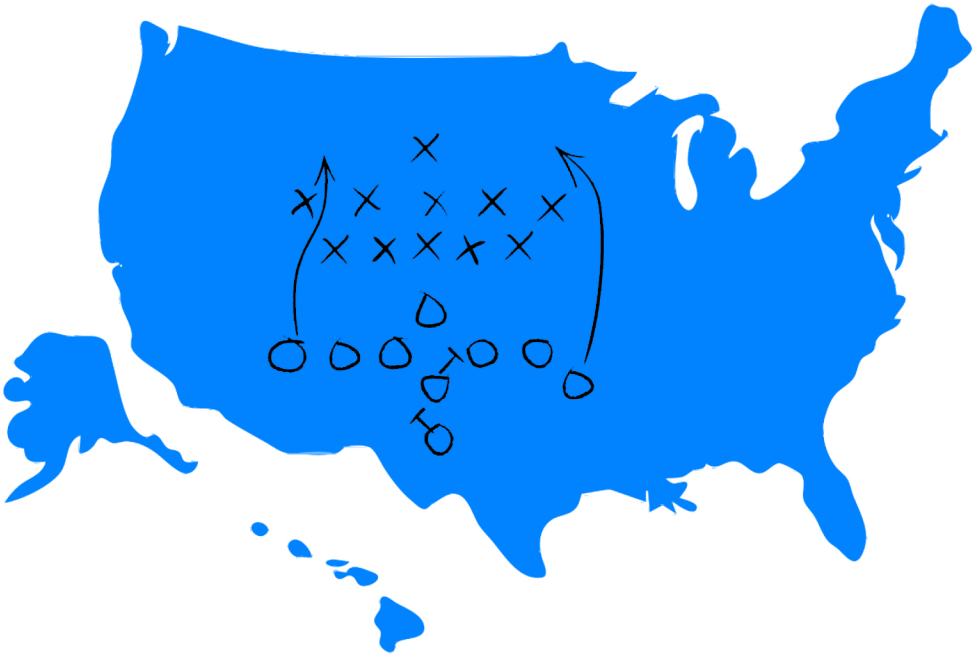

Implementing State-to-State 911 Connectivity:
Lessons Learned, Challenges, and Opportunities

NG911 Technology Maturation, What NG911 Is and Is Not, State-to-State Interconnection Considerations, GIS Policy and Standards, Interim SMS Text to 911 Implementation Considerations

Washington, DC
June 2018

911.gov

CHAPTER 2
NEXT GENERATION 9-1-1 INTERSTATE PLAYBOOK

The **Next Generation 9-1-1 Interstate Playbook, Chapter 2** provides comprehensive discussion of issues facing NG9-1-1 implementations such as standards to consult when planning transition, GIS in the NG9-1-1 ecosystem, Interim SMS Text-to-9-1-1 test scenarios, best practices and lessons learned.

LESSONS LEARNED

The definition of NG9-1-1 is elusive and no single description has been agreed upon. But, all who are in the process of defining NG9-1-1 for their operational use agree that a common understanding of what NG9-1-1 is and what it is not is an important distinction and merits discussion. Chapter 2 provides that forum.

The FCC Task Force on Optimal PSAP Architecture provide us with a NG9-1-1 Implementation Maturity Model from which to gauge implementation progress. Assessment of a state's implementation status against the phases of the Maturity Model can assist the state's decisions regarding next steps in policy, technology, project funding and implementation strategy.

There are numerous standards that impact NG9-1-1, not the least of which is the NENA i3 V3 standard. i3 is not the only one that states and local 9-1-1 authorities need to be aware of, however. Chapter 2 helps to narrow the list of pertinent standards that are important to the state or region.

GIS plays an enormous role in the implementation of effective NG9-1-1 networks and systems so this Chapter of the Interstate Playbooks discusses roles and responsibilities of the various data contributors, the need for data policy rules including data maintenance best practices, the importance of cross jurisdictional collaboration, and data sharing concepts.

HOW DOES CHAPTER 2 OF THE INTERSTATE PLAYBOOK HELP YOUR STATE?

Every section in Chapter 2 includes considerations and best practices, key focus areas, support references and suggested reading or related resources to consult. The goal of Chapter 2 is to advance understanding and to assist the state or region in accelerating NG9-1-1 deployment.

The suggestions and information provided in the Interstate Playbook are based on observable and replicable experiences of the states in the Playbook prism. Iowa, Minnesota, North Dakota, and South Dakota all have contributed to the information and recommendations included herein. The experiences discussed in this chapter can help other states and regions avoid some of the pitfalls and problems that often arise when disparate systems are interconnected. What has been learned and is shared in the Interstate Playbook can assist others to move more rapidly toward interconnection between states, and with fewer challenges or re-starts. The Interstate Playbook enables states and regions to understand what to expect, what to plan for, and how to overcome challenges.

NEXT STEPS IN NG9-1-1 INTERCONNECTION IN YOUR STATE?

Follow the experiences of participating Interstate Playbook states to gain knowledge, learn essential lessons, consider the recommended best practices and understand the challenges to avoid in your own implementations. The key focus areas, considerations and resource information provided can make the path to NG9-1-1 smoother and easier in your state.

WANT TO LEARN MORE?

The Interstate Playbook wouldn't have been possible without the continued assistance of state 9-1-1 coordinators and 9-1-1 leadership from Minnesota, North Dakota, South Dakota, and Iowa and their support partners. For more information on the Interstate Playbook, visit www.911.gov, or contact the National 911 Program at nhtsa.national911@dot.gov.

Table of Contents

1. Executive Summary 1
2. Overview – A Call To Action 7
   2.1. NG9-1-1 Implementation Maturity Model 7
   2.2. Standards Related to NG9-1-1 10
3. NG9-1-1 Technology Maturation Overview 13
   3.1. ESInet, NGCS, NG9-1-1, and i3 Architecture 13
   3.2. ESInet-to-ESInet Considerations 14
   3.3. ESInet Interconnection Experience 15
   3.4. ESInet-to-ESInet Call Transfer Requirements 16
4. State-to-State Interconnection Considerations – NG9-1-1 Points of Interconnection 20
   4.1. Challenge 21
   4.2. Legal Framework 21
   4.3. Procedural Process 22
   4.4. Outcome 22
5. GIS Overview 24
   5.1. Roles and Responsibilities 24
   5.2. Cross-Jurisdictional Collaboration 27
   5.3. Data Policy Discussion 29
   5.4. Alignment of Shared Data Policies and Standards 31
   5.5. Interlocal Agreements for GIS Data Sharing 33
   5.6. Local/Statewide Standards and Policy 33
   5.7. National GIS Standards and Guidelines 37
   5.8. Census Bureau Baseline Data 37
   5.9. National Address Database 38
   5.10. Summary 38
6. Interim SMS Text-to-9-1-1 Overview 41
   6.1. Text Deployment Solutions and Options 41
   6.2. Future Considerations 47
7. Appendices 50

Appendix A – Standards and Best Practices 1

Appendix B – Next Generation 9-1-1 (NG9-1-1) Esinet-To-Esinet Call Transfer Specifications 51

Appendix C – GIS Standards and Guidelines 57

Appendix D – National Address Database 59

Appendix E – Text-To-9-1-1 Transfer Test Cases 61

Appendix F – Minnesota 911 Standards, Protocols, Procedures 63

1. Executive Summary

Technology maturation, developments with geographic information system implementation (GIS) implementation, and the increasing deployment of interim Short Message Service (SMS) text-to-9-1-1 service have led to the completion of this second chapter of the Next Generation 9-1-1 (NG9-1-1) Interstate Playbook. While full end state NG9-1-1 implementation has not been realized, Internet Protocol (IP)-based Enhanced 9-1-1 (E9-1-1) scenarios and National Emergency Number Association (NENA) i3[1] components add value to the 9-1-1 community and the 9-1-1 system. We all recognize that progress is slow, due to funding and resource issues more than technological ones.

The 9-1-1 system has saved countless lives, but just the ability to dial 9-1-1 and have a call answered by a public safety answering point (PSAP) does not complete the emergency response continuum. State and local leaders understand that multiple systems involved in the emergency response process are critical public safety systems that are interdependent and complementary to each other. A single system by itself falls woefully short of providing comprehensive end-to-end emergency services.

The implementation of NG9-1-1 is a heavy lift for states and government, in part because it will take some time and effort before the i3 architecture for NG9-1-1 can be driven to conclusion—the NG9-1-1 migration truly is an iterative process. As such, Chapter 2 of the Interstate Playbook also is an iterative process. In this chapter, we explore several implementation stages that state and local 9-1-1 authorities will have to tackle before the benefits of full NG9-1-1 can be realized for improved emergency service response.

What you will find in this chapter:

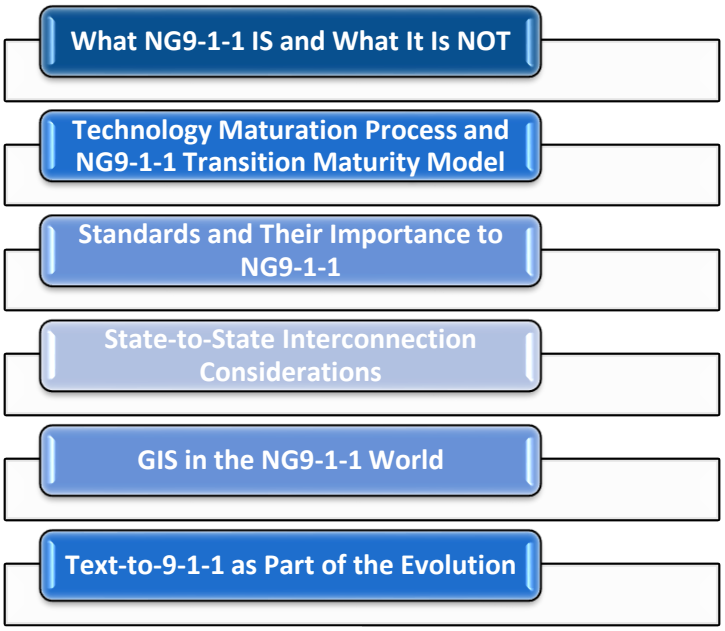

[1] NENA Functional and Interface Standards for the NENA i3 Solution.

What NG9-1-1 IS and What it is NOT

When considering NG9-1-1 and what it includes, it is important to understand certain terminology distinctions. These distinctions help define the steps needed for the transition to NG9-1-1 and can assist the agency or state in planning appropriate transitional elements and strategies. For instance, Emergency Services IP Networks (ESInets), while essential to NG9-1-1, are not considered to be "next generation," or NG. Similarly, interim SMS text-to-9-1-1 services, while often discussed in the same context as NG9-1-1, are not NG9-1-1. "Next generation" is bigger and more all-encompassing than these individual elements.

NG9-1-1 encompasses specific interfaces, processes, data, and functions. But what ***is*** NG9-1-1?

According to the NENA publication, *What is NG9-1-1?,*[2] Next Generation 9-1-1 is defined as "a system comprised of hardware, software, data and operational policies and procedures to:

- provide standardized interfaces from call and message services—process all types of emergency calls including non-voice (multimedia) messages
- acquire and integrate additional data useful to call routing and handling—deliver the calls/messages and data to the appropriate PSAPs and other appropriate emergency entities
- support data and communications needs for coordinated incident response and management
- provide a secure environment for emergency communications"

However, a recent multiorganizational effort by NENA, National Association of State 911 Administrators (NASNA), Industry Council for Emergency Response Technologies (iCERT), National 911 Program Office and NG911 Institute revised the definition of NG9-1-1. The organizations reviewed no less than 16 variations of a NG9-1-1 definition. Some of these variations did not align with the collective understanding of what constitutes NG9-1-1, while others closely followed the NENA definition from 2009. It was felt that a single agreed-to statement was needed for use by as many parties as possible, including Congress regarding potential funding legislation.

The following definition is the result of that collaborative effort:

"Next Generation 9-1-1 (services)" means a secure, IP-based, open-standards system comprised of hardware, software, data, and operational policies and procedures that:

[2] What is NG9-1-1? https://c.ymcdn.com/sites/www.nena.org/resource/resmgr/ng911_project/whatisng911.pdf.

(A) provides standardized interfaces from emergency call and message services to support emergency communications;

(B) processes all types of emergency calls, including voice, text, data, and multimedia information;

(C) acquires and integrates additional emergency call data useful to call routing and handling;

(D) delivers the emergency calls, messages, and data to the appropriate public safety answering point and other appropriate emergency entities based on the location of the caller;

(E) supports data, video, and other communications needs for coordinated incident response and management; and

(F) interoperates with services and networks used by first responders to facilitate emergency response.

The revised definition can be found in the NENA Master Glossary of 9-1-1 Terminology.[3]

A NG9-1-1 system encompasses two primary elements: the ESInet and Next Generation Core Services (NGCS). The ESInet delivers i3-compliant emergency calls to the appropriate PSAP and supports NGCS; it also potentially is the transport mechanism for other public service-related capabilities. However, the ESInet is not equivalent to the NG9-1-1 software and database functions that operate on the ESInet. Rather, the NGCS consist of the software elements and related databases that are needed to process a 9-1-1 call on the NG9-1-1 network. The distinction between the ESInet and NGCS is important. These elements and their transitional stages are outlined in the TFOPA NG9-1-1 Readiness Scorecard and the NG9-1-1 Implementation Maturity Model.

NG9-1-1 Implementation Maturity Model

NG9-1-1 service can be implemented in a variety of ways (e.g., phased or single-step implementation). Experience thus far has demonstrated that phased implementation offers the greatest opportunity for success.

In the Phase I Final Report of the Federal Communications Commission (FCC) Task Force on Optimal PSAP Architecture (TFOPA), Working Group 2 (WG2) characterized the NG9-1-1 transition as a three-

[3] NENA Master Glossary of 9-1-1 Terminology, NENA-ADM-000.21-2017, 4/13/2018; http://www.nena.org/?page=Glossary.

step continuum: the current Legacy state, an evolving Transitional state, and a final NG9-1-1 end state. In WG2's Phase II discussions, a more-evolved conceptual model of the transitional steps to NG9-1-1 was developed. The new model adds a Foundational state following the Legacy state, then an Intermediate state after the Transitional state, and finishes with two end states, Jurisdictional End State and National End State. WG2's revised transitional steps are depicted in the diagram below:[4]

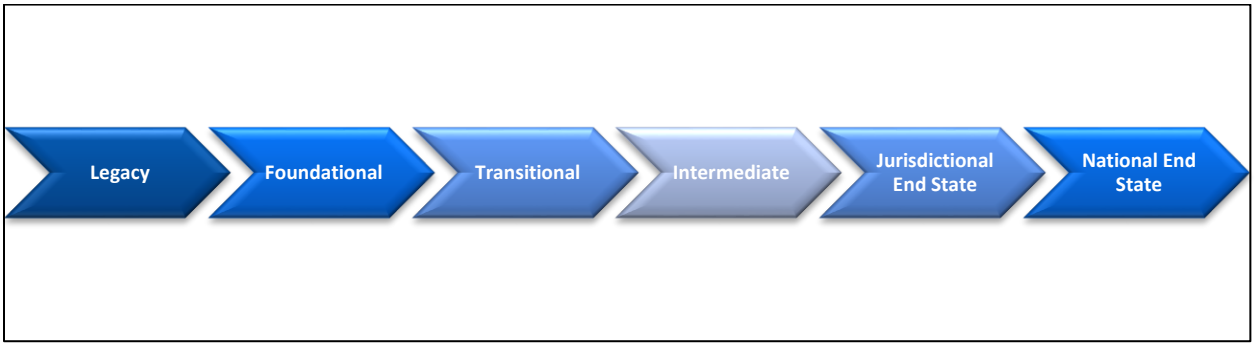

Figure 1: TFOPA's NG9-1-1 Maturity Model

As plans for, and implementation of, NG9-1-1 systems continue across the nation, the 9-1-1 community has an opportunity to embrace the new NG9-1-1 model to enhance existing cooperative relationships/partnerships and build new ones. The 9-1-1 community needs to continue the forward momentum and progress in transitioning the 9-1-1 system from the current legacy state to full end state deployment of NG9-1-1, as described in the TFOPA document.

Standards

NG9-1-1 will require use of a common set of standards, which not only will enable a consistent transition, but also will provide for structured maintenance and sustainability of the system. Most standards are either voluntary, consensus-based, or open, but it is imperative that standards be established and consistently adopted to achieve interoperability, especially with the nationwide public safety broadband network (NPSBN) being built under the direction of the First Responder Network Authority (FirstNet), as well as other emergency communications systems and technologies that will interconnect with NG9-1-1 systems. This section of Chapter 2 will identify current standards related to NG9-1-1 that should be accessed and consulted by any state or local agency preparing to transition 9-1-1 services to NG9-1-1.

Interstate Connectivity

As states continue to deploy NG9-1-1, multiple parties will be involved in bringing the full transition of NG9-1-1 to fruition. Although the goal is to implement NG9-1-1 as quickly and efficiently as possible, questions may arise that state, regional, or tribal entities may not anticipate. Each state likely will

[4] TFOPA Wg2 Supplemental Report 9-1-1 Readiness Scorecard 12 02 16, https://transition.fcc.gov/pshs/911/TFOPA/TFOPA_WG2_Supplemental_Report-120216.pdf.

implement NG9-1-1 in a slightly different way; however, these challenges and outcomes are highlighted in Chapter 2 so that other states can anticipate what may arise, what to expect, and what approaches can be taken to mitigate any obstacles. In addition, notifying and collaborating with appropriate parties ahead of a potential concern will increase the probability of efficient and on-time implementation.

Chapter 2 includes a section on interstate connectivity that reports on one state's challenges and discusses the process and arguments surrounding interconnection points and legal obligations.

GIS in the NG9-1-1 World

The development of GIS data for use by NG9-1-1 systems is possibly the largest impact on the NG9-1-1 implementation cycle at the local level. More work, directly tied to local resources, needs to occur in this area than any other. Other agencies and partners, such as state GIS entities, that previously may not have been closely aligned with 9-1-1 services, will be engaged and involved in building NG9-1-1-related GIS. Conversions of existing data, creation of new GIS datasets, quality assurance and workflow processes, revalidation of telecommunication service provider's databases, boundary discussions, and data sharing with other governmental entities all will be part of the state or local 9-1-1 authority's mission to create seamless alignment of data for NG9-1-1 call routing and data delivery.

The GIS Section of Chapter 2 discusses roles and responsibilities of the parties, data policy considerations, public versus private data consideration, and NG9-1-1 GIS best practices and standards that can assist in data creation, accuracy and usage.

Interim SMS Text-to-9-1-1 Service

While interim SMS text-to-9-1-1 service is not considered to be NG9-1-1, and the NG9-1-1 end state is not required to implement interim SMS text-to-9-1-1 service, they are inextricably interrelated and often are confused as part of the NG maturity scale.

Interim SMS text-to-9-1-1 service is being deployed in PSAPs nationwide. The solution leverages the commonly available, native SMS text service provided by wireless carriers. When text-to-9-1-1 service is deployed, wireless subscribers with texting capabilities can send an emergency call-for- service message to a PSAP simply by typing the 9-1-1 on their mobile devices.

Interim SMS text-to-9-1-1 service can benefit individuals in emergency situations when they are unable to safely make a call, as well as individuals who are deaf, hard of hearing, and/or speech impaired. These are not the only communities or individuals who can benefit from interim SMS Text-to-9-1-1. However, the common message within the public safety community is, "call if you can, text if you can't," as it is often faster to get answers and help to individuals when they are able to speak their location and verbally provide other details about their emergency. In areas where interim SMS text-to-9-1-1 service has been deployed, it is reported that the overall impact of the service has been minimal and that the majority of requests for assistance still are made via a voice call.

This section of Chapter 2 discusses various deployment options, solutions, strategies and steps to follow for successful integration, operational planning considerations, and how to conduct appropriate field testing once a system is deployed.

Summary

Every state or region surely will make its own decisions on how to implement NG9-1-1 for its jurisdiction. It is hoped that Chapter 2 of the Interstate Playbook will provide guidance to ease and accelerate the transition.

2. Overview – A Call To Action

NG9-1-1 implementation is maturing and evolving continually; hence the creation of the NG9-1-1 Interstate Playbook, "**Chapter 2**." Even the four involved states that have NG9-1-1 implementations—Iowa, Minnesota, North Dakota and South Dakota—continually are evolving and changing their networks and services. Going forward, there will be continual changes and more interconnection phases implemented, some of which will involve interconnecting disparate ESInets. These future phases clearly will have different requirements and methods of operation that will contribute to future Interstate Playbook chapters and continue to provide information to the consumer of this document.

The challenges experienced with every new iteration of networks, functions, and services will present new opportunities to explore benefits and options and to provide alternate choices for states and regions to consider.

States and regional jurisdictions can do much to advance NG9-1-1 implementation and interconnectivity between and among neighboring states. If your ESInet is not operational, start now to plan and transition your network. If your ESInet is operational, start the process now to interconnect with neighboring regional or state ESInet systems. The four Interstate Playbook participant states have started the process and the tools to accomplish it are within the pages of this chapter.

Now it's up to you. Put these recommendations into action so that the 9-1-1 community can start to realize the vision and benefits of a network of networks. Interconnecting more states begins to weave the mesh of NG9-1-1 capabilities wider and with more functionality than has been enjoyed previously—but it is only the beginning. You can help write the rest of the story.

The National 911 Program will continue to monitor the efforts of these four states and the 9-1-1 industry at large. The Program is committed to documenting the collective experience for the benefit of all states, regions and 9-1-1 operations throughout the nation, to accelerate the implementation and interconnection of NG9-1-1 services.

2.1. NG9-1-1 Implementation Maturity Model

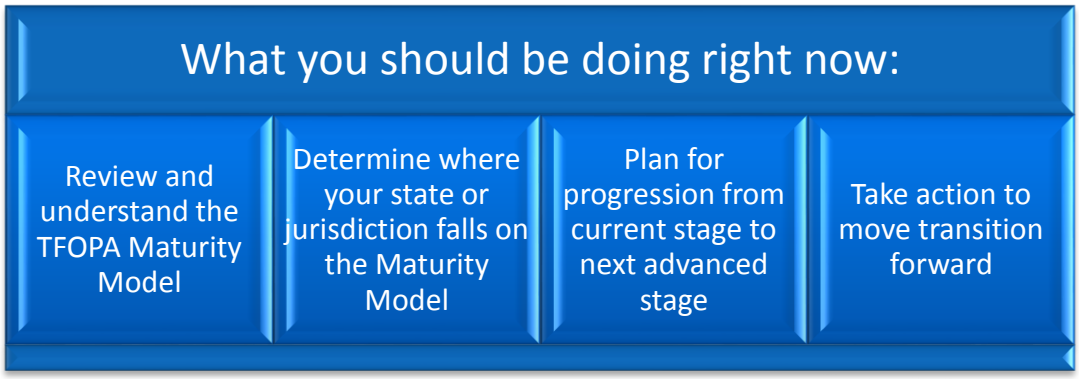

NG9-1-1 can be implemented in a variety of ways (e.g., phased or single-step implementation). Experience thus far has demonstrated that phased implementation offers the greatest opportunity for

success. The NG9-1-1 Implementation Maturity Model, previously documented by the National 911 Program Office within the U.S. Department of Transportation in its DRAFT NG9-1-1 Functional and Technical Requirements document, is a well-crafted model and has been incorporated into the NG9-1-1 Readiness Scorecard developed by the Federal Communications Commission (FCC) Task Force on Optimal PSAP Architecture (TFOPA). TFOPA's Working Group 2 (WG2) loosely based its work on the National 911 Program Office's NG9-1-1 Implementation Maturity Model.

The NG9-1-1 Implementation Continuum, employed within the NG9-1-1 Readiness Scorecard, utilizes the following NG9-1-1 Implementation Maturity States, which are aligned substantially with those in the aforementioned National 911 Program Office document:

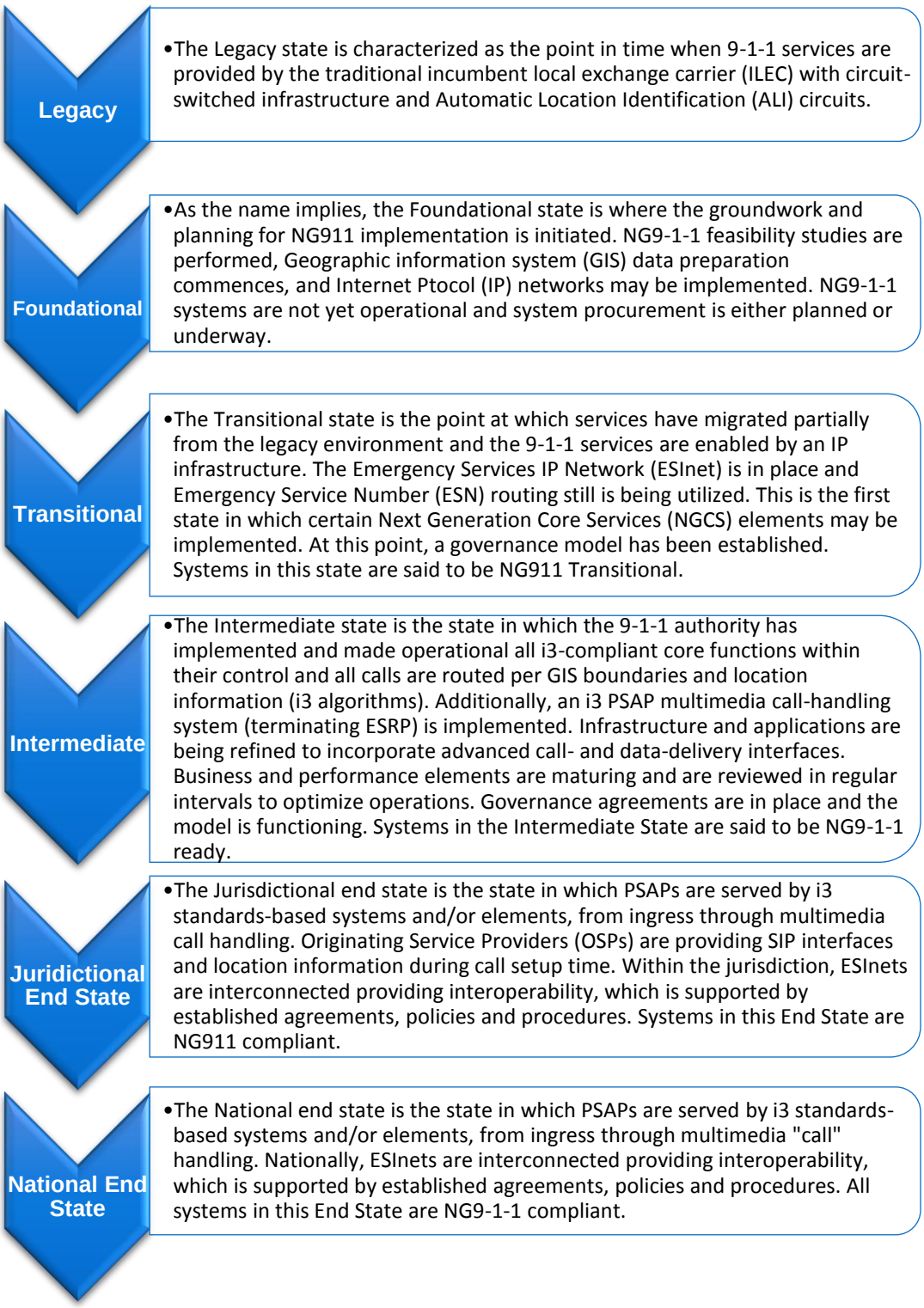

Figure 2: NG9-1-1 Implementation Maturity Model

As plans for, and implementation of, NG9-1-1 systems continue across the nation, the 9-1-1 community has an opportunity to embrace the NG9-1-1 model to enhance existing cooperative relationships/partnerships and build new ones. The 9-1-1 community needs to continue the forward momentum and progress in transitioning the 9-1-1 system from the current Legacy state to full Jurisdictional and National end state deployment of NG9-1-1, as described in the TFOPA document.

Considerations and Best Practices

- Strategically plan your transition
- Determine readiness
- Consult the NG9-1-1 Implementation Maturity Model for your state or region's transition stage

Key Focus Points

- Lay groundwork and planning for forward transition momentum
- Build cooperative relationships

Support References and Recommended Reading

TFOPA Working Group 2, Phase II Supplemental Report, NG9-1-1 Readiness Scorecard, December 2, 2016; https://transition.fcc.gov/pshs/911/TFOPA/TFOPA_WG2_Supplemental_Report-120216.pdf.

2.2. Standards Related to NG9-1-1

NG9-1-1 will require usage of a common set of standards, which not only will enable a consistent transition, but also will provide for structured maintenance and sustainability of the system. Most standards are either voluntary, consensus-based, or open,[5] but it is imperative that standards be established and consistently adopted to achieve interoperability, especially with the nationwide public safety broadband network (NPSBN) being built under the direction of the First Responder Network Authority (FirstNet) and other emergency communications systems that will interconnect with NG9-1-1 systems.

NENA began developing NG9-1-1 standards in 2003 and to date, has pioneered a vast array of NG9-1-1-related standards. In addition to NENA, other standards development organizations (SDOs) have

[5] https://www.standards.its.dot.gov/LearnAboutStandards/ITSStandardsBackground

generated NG9-1-1-related standards, such as the Association of Public-Safety Communications Officials (APCO), Telecommunications Industry Association (TIA), 3rd Generation Partnership Project (3GPP), and the Alliance for Telecommunications Industry Solutions (ATIS).

To ensure that stakeholders have access to a compilation of existing and planned standards for NG9-1-1 systems, the National 911 Program developed the *Next Generation 911 Standards Identification and Review.*[6] Specific standards identified in this document are limited to those most germane to NG9-1-1—that is, relating to the changes required to support enhanced capabilities, such as emergency call support provisioning between client devices and ESInets. Currently, 41 standards and best practices organizations are listed in the body of this document, with a dedicated page for each organization to include the background, relevant standards, and effects on NG911. Appendix A of the *Next Generation 911 Standards Identification and Review* document identifies all standards in alphabetical order by organization, provides a description of each standard and its latest release date, and indicates its relationship to the NENA i3 architecture. Appendix B of the *Next Generation 911 Standards Identification and Review* document identifies the gap analysis process used to identify needed standards (e.g., access networks, location validation), current applicable standards, and whether the identified gap has been addressed. As the initial release was in 2011, a yearly refresh is conducted to ensure that this document is kept up to date.

A fundamental architecture standard for NG9-1-1 is NENA STA-010, *Detailed Functional and Interface Standards for the NENA i3 Solution*[7], which defines the structure, functions and features available in NGCS. Others include the NENA-STA-006.1, *NENA Standard for NG9-1-1 GIS Data Model*[8], and the *NENA/APCO Emergency Incident Data Document* (EIDD)[9], which defines the methods and mechanisms for data flow and exchange with multiple users in the 9-1-1 space. These standards, and numerous others, are critical to a standardized and interoperable NG9-1-1 service. The reader is encouraged to consult www.911.gov for the most current version of all related standards.

As any unstandardized or unplanned approach may affect the ability of public safety answering points (PSAPs) and emergency responders to effectively share information, states, agencies and other stakeholders are encouraged to employ and consult this document when moving through transition planning and NG9-1-1 implementation.

Considerations and Best Practices

- Consult existing standards related to the NG9-1-1 transition
- Ensure that stakeholders have access to a compilation of existing and planned NG9-1-1 standards
- Research newly developed or in-progress standards for awareness, education and understanding of current requirements

---

[6] https://www.911.gov/project_standardsforenhancedandnextgeneration911.html
[7] NENA-STA-010.2-2016
[8] Standard in progress; monitor at http://www.nena.org/?page=Standards.
[9] APCO NENA 2.105.1-2017

- Consult www.911.gov for the most current version of all related standards.

Key Focus Points

- ➢ Use existing standards to guide transition and define approach.

Support References and Recommended Reading

The International Organization for Standardization (ISO) /International Electromechanical Commission (IEC) defines standards as a document, established by consensus and approved by a recognized body that provides, for common and repeated use, rules, guidelines or characteristics for activities of their results, aimed at the achievement of the optimum degree of order in a given context.[10]

[10] https://www.911.gov/project_standardsforenhancedandnextgeneration911.html

3. NG9-1-1 Technology Maturation Overview

What you should be doing right now:			
Engage ESInet providers early in the planning process to identify required steps for interconnection.	Ensure ESInet design plan considers population, call volume, regional needs, security redundancy, etc.	Begin cross-jurisdiction coordination as an early step in ESInet planning.	Identify call transfer requirements as part of the design and needs assessment phase of ESInet implementation.

3.1. ESInet, NGCS, NG9-1-1, and i3 Architecture

When considering NG9-1-1 and what it includes, it is important to understand the distinctions in the terminology commonly associated with this topic. These distinctions help define the steps needed for the NG9-1-1 transition and can assist the state or local agency in planning appropriate transitional elements and strategies.

For instance, Emergency Services IP Networks (ESInets), while essential to NG9-1-1, are not considered to comprise complete "end state next generation," or end state NG9-1-1. Similarly, interim Short Message Service (SMS) text-to-9-1-1 services, while often discussed in the same context as NG9-1-1, are not NG9-1-1. "Next generation" is bigger and more all-encompassing than these individual elements.

NG9-1-1 encompasses specific interfaces, processes, data, and functions. But what ***is*** NG9-1-1?

According to the NENA publication, *What is NG9-1-1?,*[11] NG9-1-1 is defined as "a system comprised of hardware, software, data and operational policies and procedures to:

- provide standardized interfaces from call and message services—process all types of emergency calls including non-voice (multimedia) messages
- acquire and integrate additional data useful to call routing and handling—deliver the calls/messages and data to the appropriate PSAPs and other appropriate emergency entities
- support data and communications needs for coordinated incident response and management
- provide a secure environment for emergency communications"

The ESInet is the transport network used to deliver emergency calls to i3-compliant PSAPs. It supports Next Generation Core Services (NGCS), [12] which enable the proper location, routing and delivery of

[11] What is NG9-1-1? https://c.ymcdn.com/sites/www.nena.org/resource/resmgr/ng911_project/whatisng911.pdf.
[12] The base set of services needed to process a 9-1-1 call on an ESInet. Includes the ESRP, ECRF, LVF, BCF, Bridge, Policy Store, Logging Services and typical IP services such as DNS and DHCP. The term NG9-1-1 Core Services includes the services and not the network on which they operate. See Emergency Services IP Network. (NENA-INF-015 NG9-1-1 Security Information Document); https://c.ymcdn.com/sites/www.nena.org/resource/resmgr/standards/NENA-INF-015_NGSEC_INF_20161.pdf.

emergency calls to public safety answering points (PSAPs) in an NG9-1-1 environment. The ESInet also, potentially, is the transport mechanism for other public service-related capabilities. The ESInet is not equivalent to the NG9-1-1 software and database functions that operate on the ESInet, i.e., the NGCS. The ESInet and the NGCS together constitute an NG9-1-1 system.

The National Emergency Number Association (NENA) i3 architecture standard for NG9-1-1[13] provides the structure of software elements and related databases that define NGCS functionality. The NGCS define the core services that are needed to process an emergency call on the NG9-1-1 network. These services include the following:

- Location Validation Function (LVF) for validation of location information against geographic information system (GIS) information
- Emergency Call Routing Function (ECRF) and Emergency Call Routing Proxy (ESRP) for call routing and call processing
- Border Control Function (BCF) for security and control of the 9-1-1 calls and information presented to and from the ESInet
- Other elements supporting policy routing, logging, bridging, and other IP services.

The distinctions between the NG9-1-1 components described above are important, as the transition to NG9-1-1 requires a focus on different elements. These elements and stages of transition are outlined in the TFOPA NG9-1-1 Readiness Scorecard discussed in the Maturity Model section of this chapter.[14]

3.2. ESInet-to-ESInet Considerations

According to the TFOPA WG2 Supplemental Report, NG9-1-1 Readiness Scorecard,[15] numerous considerations exist when planning to implement an ESInet. Those considerations include the following:

- Sizing the network with future needs and functions in mind
- Designing the network to ensure appropriate resiliency
- Quality and service level agreements (SLAs) upon implementation
- Proper planning for network management and security as the network grows
- Cross-entity collaboration

This section of Chapter 2 focuses on the final ESInet consideration, cross entity collaboration and planning when implanting and interconnecting ESInets between agencies, regions or states.

[13] NENA Functional and Interface Standards for the NENA i3 Solution.
[14] Task Force on Optimal Public Safety Answering Point Architecture (TFOPA), Working Group 2 Phase II Supplemental Report: NG9-1-1 Readiness Scorecard, https://transition.fcc.gov/pshs/911/TFOPA/TFOPA_WG2_Supplemental_Report-120216.pdf.
[15] Ibid.

3.3. ESInet Interconnection Experience

When planning an ESInet implementation, interconnection between agencies, regions or states becomes an important consideration for jurisdictions that need that ability to transfer calls or alternate-route to jurisdictions that will not reside on the same network.

As referenced in the TFOPA Maturity Model, interconnection between ESInets is optional at the Transitional state. Such interconnections enable entities to support each other when on disparate networks. Interstate Playbook, Chapter 1, Section 4, Technical Considerations, outlines the considerations and planning necessary to successfully interconnect ESInets. In one such case, between PSAPs operated by the Red River Regional Dispatch Center in North Dakota and Beltrami County in Minnesota, important lessons were learned in the interconnection and testing process.

This interconnection has been recognized and implemented between North Dakota's ESInet and Minnesota's ESInet. There are circumstances along the Red River (which represents the border between the two states) where wireless calls are misrouted due to the current limitations of sector-based routing. The interconnection of ESInets between the states allows North Dakota and Minnesota PSAPs to seamlessly transfer misrouted calls to each other, along with valuable location information. This interconnection and interagency coordination was made possible through collaborative discussions that outlined requirements and policies needed to support 9-1-1 calls and text messages in the region.

To complicate matters, the Red River Regional Dispatch Center in Fargo, North Dakota, answers voice, teletypewriter (TTY) and text calls for Clay County, Minnesota, and Cass County, North Dakota. These connections are made possible via a direct IP connection to North Dakota's ESInet and a PSAP gateway connection (IP-to-CAMA[16] conversion) to Minnesota's ESInet. The ESInet and text implementations required planning and preparation to enable voice, TTY and text call delivery from Clay County to the Red River Regional Dispatch Center. This included not only technical planning but also communication of the policies and procedures used at the different agencies. The ESInet and Text Control Center (TCC) provider for each state is the same. Consequently, when Minnesota was working to deploy the IP network as well as text messaging, vendor engagement and adherence to certain requirements were needed to account for this scenario.

The team identified the following considerations and lessons as a result of this interconnection:

- Engage ESInet and TCC providers early in the deployment process to identify issues and resolutions that enable ESInet interconnection for call and text delivery.
- Identify the technology required to support such cross-network and cross-state agreements, for example, an IP-to-CAMA gateway is used to deliver voice and TTY calls from Clay County, on the Minnesota ESInet, to the Red River Regional Dispatch Center, on the North Dakota ESInet.
- Clay County text messages are routed through the North Dakota ESInet; this IP connection was needed so that Red River Regional Dispatch Center could receive Clay County text messages through its customer premise equipment (CPE) interface. This required coordination with the

[16] Centralized automatic message accounting.

TCC provider to ensure that proper configuration and routing was in place for text messages coming from Clay County.

In the situation above, an agreement was in place between agencies where one agency managed voice calls, TTY and text traffic for another. One also must consider the scenario where calls and text messages frequently are transferred from one agency to another on separate ESInets. This too requires early engagement of ESInet and TCC providers to ensure that the transfer needs and capabilities are understood, and networks are designed to support these needs. Early communication between agencies also is needed to share policies and processes and to help establish awareness and understanding as to how neighboring agencies are supporting 9-1-1 calls and texts. This awareness helps to establish common practices and/or understand expectations between agencies.

For example, North Dakota deployed a regional interim SMS text-to-9-1-1 solution before Minnesota. As Minnesota was planning their regional text deployment, they worked with North Dakota to understand the latter's text policy. With that information sharing, Minnesota was able to establish a policy for interim SMS text-to-9-1-1 service that fit their needs at deployment and closely mirrored that of North Dakota. The Minnesota text policy is included in Appendix F of this chapter and provides a reference for possible policy considerations when deploying interim SMS text-to-9-1-1 service. This collaboration and coordination is beneficial to ensure common understanding between states and agencies to best support the public using 9-1-1 service in those areas.

3.4. ESInet-to-ESInet Call Transfer Requirements

Through the collaborative efforts of two primary NGCS providers, the working group for the Interstate Playbook has developed recommended ESInet-to-ESInet call transfer requirements. Until now, no such standard or guideline has been published. The ESInet-to-ESInet Call Transfer Requirements document works to define the requirements and call flow for transferring 911 calls between PSAPs across disparate ESInet providers. The focus of this document is the handling of call transfers initiated by a PSAP call-taker who has determined that a call needs to be transferred to a PSAP that resides in a different ESInet.

When establishing the capabilities to transfer calls between ESInets, both NENA i3 and transitional models were recognized, as there are variations in deployments nationwide and thus differences in how call transfers between disparate ESInets are executed based on the technologies that are in place. There will continue to be differences in the solutions deployed, and when implementing an ESInet it is important to consider the methodology required to allow transfers between PSAPs operating on disparate ESInets.

The ESInet-to-ESInet Call Transfer Requirements document addresses assumptions and scenarios used in establishing the requirements for successful transfers. The requirements focus on the scenario where the ingress call is answered by PSAP A and is then transferred to PSAP B, which resides on a different ESInet. The scenarios include both the Transitional state and a fully i3-compliant solution, to support the possible configurations throughout the transition to the Jurisdictional or National end state. The diagrams below illustrate three scenarios: 1) baseline network setup; 2) the i3-compliant call transfer scenario; and 3) the transitional call transfer scenario.

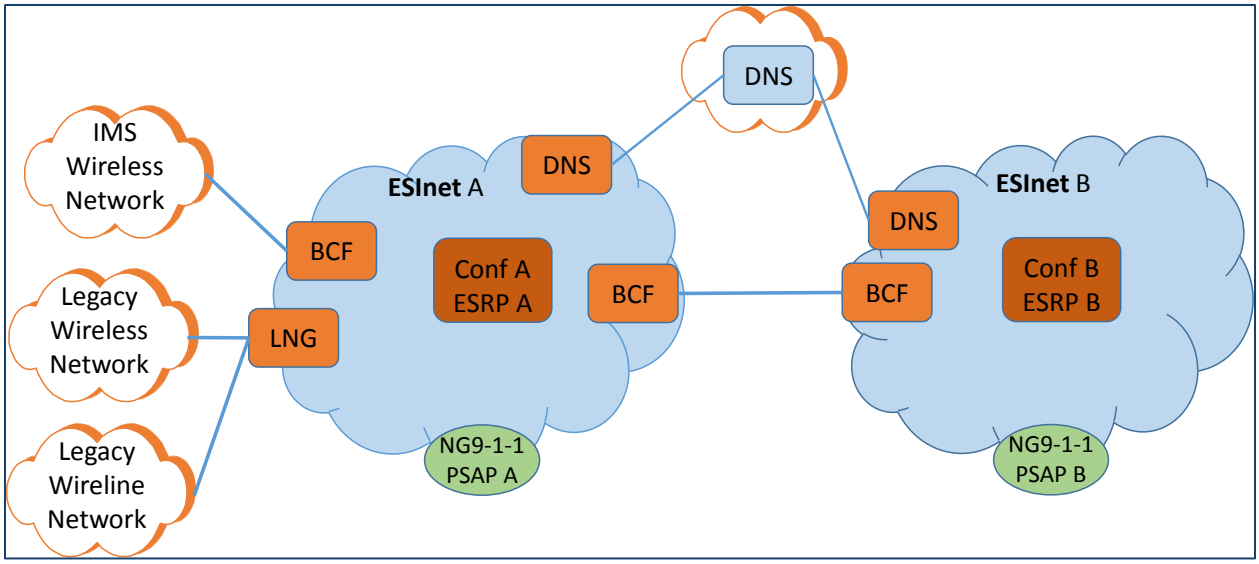

Figure 3: Baseline Network Solution Context Diagram

Figure 3 depicts two separate ESInet designs including the high-level elements required for transferring a call from PSAP A to PSAP B. The ESInets are provided by disparate service providers.

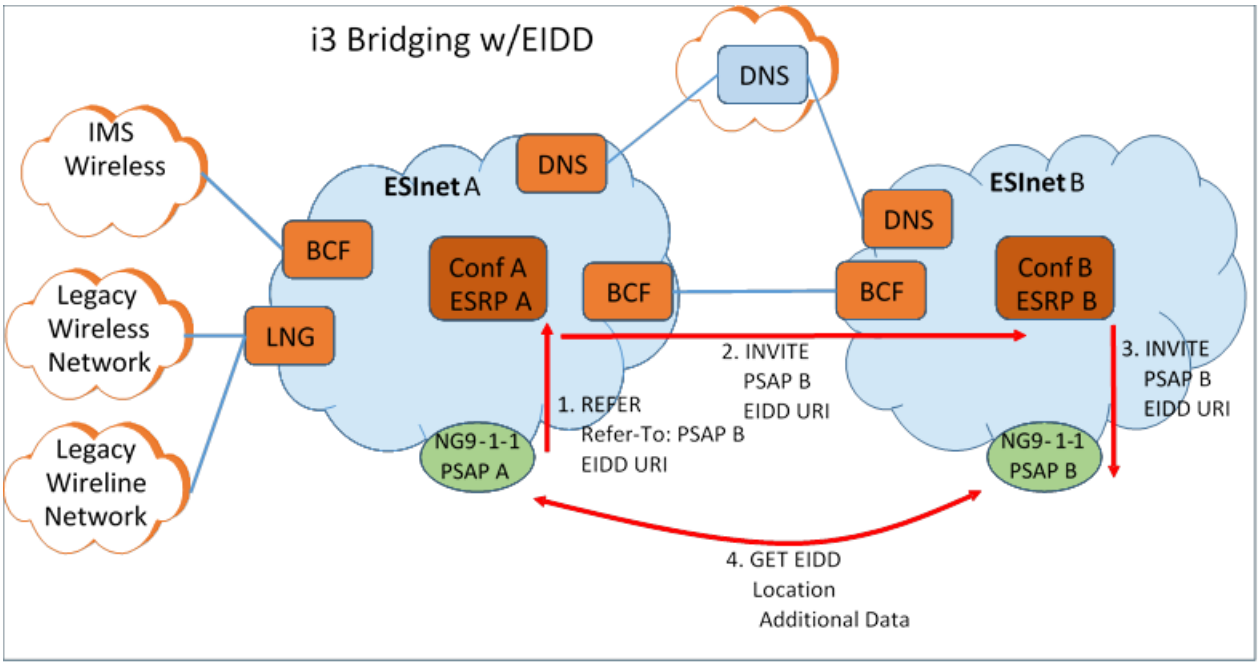

Figure 4: Fully NENA i3-Compliant Transfer Method

Figure 4 illustrates the steps required to successfully transfer a call from PSAP A to PSAP B in an environment where both solutions utilize a fully NENA i3-compliant solution. With this method, an

Emergency Incident Data Document (EIDD) is introduced and utilized, and a reference to it is sent with the call from PSAP A to PSAP B to dereference the caller's location and additional data.

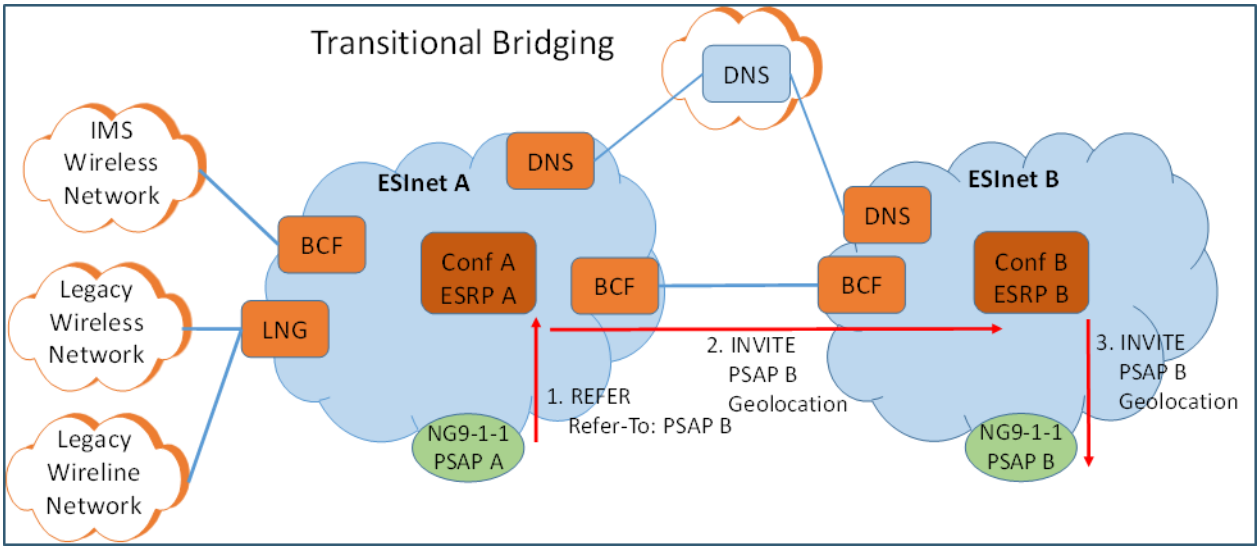

Figure 5: Transitional Bridging Method

Figure 5 illustrates the steps required to successfully transfer a call from PSAP A to PSAP B in a transitional environment where ESInet A determines the location method and includes that in a geolocation header (with location by value or location by reference). ESInet A then sends the call to ESInet B, which forwards the call to PSAP B. PSAP B uses the geolocation header to obtain location information (either by value with the call or by dereferencing the location) and any additional information.

Appendix B, Next Generation 9-1-1 (NG9-1-1) ESInet-to-ESInet Call Transfer Specifications, in this chapter provides assumptions, a full description of the i3-compliant and transitional bridging methods, the set of requirements to be followed by the ESInet provider when enabling legacy wireless and wireline call transfers, and a summary of scenarios not considered for the initial set of requirements. This document was developed to support collaboration between service providers in regions where different providers are delivering services in neighboring regions where support of call transfers is required between agencies and service areas.

Considerations and Best Practices

- An ESInet is the foundation of NG9-1-1 services that requires upfront planning and consideration of population, call volume, regional needs, redundancy, etc., as part of the design and implementation process.
- Cross-entity collaboration and coordination should be included as a step when planning an ESInet implementation.
- Call transfer requirements should be identified as a part of the design and needs assessment phase of an ESInet implementation.

- Disparate ESInet providers should be engaged early in the planning process to identify required steps for interconnection.

Key Focus Points

- An ESInet is the transport mechanism for emergency service requests and is separate from the services, i.e., the NGCS, that reside on the network.
- Collaboration and planning are necessary when interconnecting ESInets.
- Cross-agency communication is an important aspect of understanding the policies and processes used in call and text transfer scenarios.

Support References and Recommended Reading

TFOPA Working Group 2, Phase II Supplemental Report: NG9-1-1 Readiness Scorecard
https://transition.fcc.gov/pshs/911/TFOPA/TFOPA_WG2_Supplemental_Report-120216.pdf

What is NG9-1-1?
https://c.ymcdn.com/sites/www.nena.org/resource/resmgr/ng911_project/whatisng911.pdf

NENA-STA-010.2-2016, NENA Detailed Functional and Interface Standards for the NENA i3 Solution (originally NENA 08-003)
https://c.ymcdn.com/sites/www.nena.org/resource/resmgr/standards/NENA-STA-010.2_i3_Architectu.pdf

NENA-ADM-000.21-2017, NENA Master Glossary of 9-1-1 Terminology, April 13, 2018
http://c.ymcdn.com/sites/www.nena.org/resource/resmgr/standards/NENA-ADM-000.22-2018_FINAL_2.pdf

4. State-to-State Interconnection Considerations – NG9-1-1 Points of Interconnection

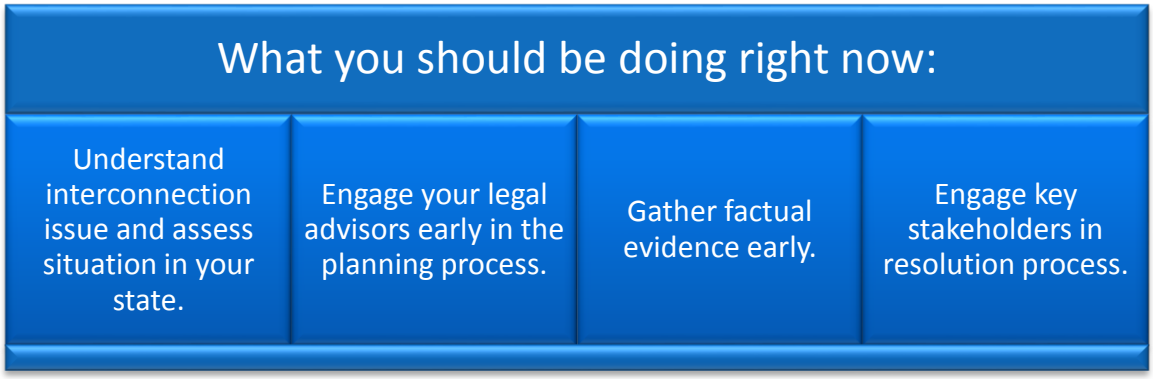

As states continue to deploy NG9-1-1 systems, multiple parties will be involved in bringing the full transition to fruition. Although the goal is to implement NG9-1-1 service as quickly and efficiently as possible, questions may arise that state, regional, or tribal entities may not anticipate. Each state likely will implement NG9-1-1 in a slightly different way. Several challenges and outcomes are described below so that other states can anticipate what may arise and what approaches can be taken to mitigate any obstacles. In addition, notifying and collaborating with appropriate parties ahead of a potential concern will increase the probability of efficient and on-time implementation.

A situation that recently came to light in South Dakota involves a question of which party has responsibility for 911 traffic transport between a rural carrier's[17] service areas and a NG9-1-1 network's centralized points of interconnection. This inquiry was posed to the South Dakota Public Utilities Commission (PUC) in October 2017, as no resolution had been reached after a year of discussions between the South Dakota 911 Coordination Board (Board), South Dakota's selected ESInet provider, NextGen Communications (NextGen), and the South Dakota Telecommunications Association (SDTA).

[17] Carriers refers to LECs/CLECs/RLECs and encompasses all telecommunications services.

4.1. Challenge

In 2012, legislation was enacted to upgrade South Dakota's 911 system to NG911, and as part of Comtech's next-generation implementation, NextGen was contracted to design and maintain this NG911 system for South Dakota. A joint stipulation, which is a formal resolution of issues, between SDTA and NextGen was prepared; however, under Section 7 of the stipulation, the issue of which entity had responsibility for transporting 911 traffic to NextGen's centralized points of ingress (POI), located in Sioux Falls and Rapid City, was not resolved.[18]

In seeking a resolution, the statute in question, SDCL 49-31-79,[19] calls for a determination of whether it is technically feasible for SDTA's members to connect to the NG9-1-1 system outside their service area; it also asks whether doing so would be unduly burdensome. If it is proven to be unduly burdensome, rural carriers are exempted under the statute, although rural carriers may agree voluntarily to interconnection requests.

The first PSAP cutover to the new ESInet in South Dakota is scheduled for late spring 2018, with the entire project slated for completion by late spring 2019. Progress likely will be hindered, however, until this issue is resolved.

4.2. Legal Framework

To receive guidance in this matter, the Board petitioned the PUC to issue a declaratory ruling, which is a determination that resolves legal uncertainty for the parties. Shortly thereafter, South Dakota Network (SDN), SDTA, and NextGen petitioned for intervention to become parties in the docket, which was granted. Although not involved in the initial discussions, SDN petitioned for intervention to clarify incorrect factual allegations made by one of the original parties, which implicated SDN.

In addition to determining the feasibility and burden questions raised under SDCL 49-31-79 (also referenced in 47 U.S.C § 251[20]), another statute, 47 U.S.C. § 254[21] comes into play in determining whether the request is also consistent with universal service provisions. 47 U.S.C. § 254 provides that policies will be based on the preservation and advancement of universal service principles, such as the following:

- Service quality and rates
- Access to advanced services

[18] https://puc.sd.gov/commission/dockets/telecom/2015/tc15-062/stipulation.pdf.
[19] http://sdlegislature.gov/Statutes/Codified_Laws/DisplayStatute.aspx?Type=Statute&Statute=49-31-79
[20] https://www.gpo.gov/fdsys/pkg/USCODE-2011-title47/pdf/USCODE-2011-title47-chap5-subchapII-partII-sec251.pdf.
[21] https://www.gpo.gov/fdsys/pkg/USCODE-2009-title47/pdf/USCODE-2009-title47-chap5-subchapII-partII-sec254.pdf.

- Access in rural and high-cost areas
- Equitable and nondiscriminatory contributions

After investigating the matter further, the PUC stated that they believe a petition for a declaratory ruling on interconnection requests is not the most appropriate channel, as the procedure stipulates that a petitioner provide an agency with a set of facts and requests for the agency to determine whether and how the statute applies to the uncontested fact-based scenario. A declaratory ruling is not a contested-case proceeding and pertaining to this matter, may not fully determine which entity has the end responsibility to transport 911 traffic to the NG9-1-1 centralized POI.[22]

4.3. Procedural Process

The statute in question, SDCL 49-31-79, requires PUC staff to rely on the specific facts involved, review evidence presented by the parties, and make factual determinations as to whether the request is consistent with the universal service principles and provisions set forth in 47 U.S.C § 254, as well as determine whether the request is technically feasible and not economically burdensome for each rural telephone company. Unless the PUC determines that a rural telephone company cannot be required to fulfill an interconnection request with a POI in Sioux Falls or Rapid City, the question as to which entity has the responsibility to transport traffic to the POI cannot be fully answered in the docket.

The PUC acknowledged a declaratory ruling could be made on certain questions posed, namely whether a rural telephone company, after receiving a bona fide interconnection request from NextGen, could be required to interconnect with the requestor at centralized POI in either Rapid City or Sioux Falls. In addition, the PUC also could determine what area is included in a rural telephone company's network, what items are required for an interconnection request to be bona fide, and whether NextGen does need an interconnection agreement from the rural telephone companies.

4.4. Outcome

The outcome in this matter is still to be determined. At the time of this writing, the most recent step the PUC had taken was to grant NextGen's motion to dismiss the declaratory ruling and move forward with a contested case proceeding, in which the law requires the legal rights, duties or privileges of a party to be determined by an agency after an opportunity for a hearing.[23] This action was deemed to be the most appropriate course in deciding the finality of the question. State, regional, and tribal entities are encouraged to monitor this issue and keep apprised of the procedural process and decisions that transpire.

Even though this matter has not been resolved as of this writing, there are steps and best practices that can be followed to help guide the reader through a similar situation in other states.

[22] Photo by Unknown Author is licensed under CC (Creative Commons) BY-NC-ND.
[23] https://dss.sd.gov/formsandpubs/docs/ADMIN/GuidetoAdminHearingsProc.pdf.

Considerations and Best Practices

- Understand the issue and assess whether this matter potentially could arise in your state
- Actively monitor and understand how the PUC determines the outcome
- Engage legal advisors early in the process
- Gather factual evidence early in the process
- Ask if any issues require resolution under a joint stipulation
- Ensure that all parties are actively involved in reaching a resolution

Key Focus Points

- Assess the situation in your state
- Identify appropriate parties
- Engage and collaborate
- Mitigate potential issues

Support References and Recommended Reading

South Dakota Public Utilities Commission Docket, TC17-063 – In the Matter of the Petition for a Declaratory Ruling by Department of Public Safety/911 Coordination Board Regarding Determining Responsibility for Rural Carrier Interconnection to the Next Generation 9-1-1 System, http://puc.sd.gov/Dockets/Telecom/2017/TC17-063.aspx.

5. GIS Overview

What you should be doing right now:				
Define local requirements based on NENA standards.	Define quality standards to be used by the state or region.	Define how, what and frequency of data to be collected.	Procure or build a solution to accomplish needs.	Consider automation whenever possible.

A GIS enables the display of database information visually on a map. A GIS creates maps and graphics from the information contained in the databases. As a foundational element of NG9-1-1, geographic data and systems will be heavily relied upon to support the routing of calls to the correct PSAP.

A GIS is far more than just a mapping program. More specifically, it is a complex mix of database management, display technology, and analysis tools that can be used to create maps, solve problems that have a spatial context, and enable processes such as emergency call routing that leverages the locations of features. All information in a GIS is referenced to a location. A GIS can contain images of aerial photography, photographs of homes, floor plans of buildings, and large amounts of text and attribute information, all tied into the databases by their location on the earth's surface. A GIS enables every feature on a map to be represented by points, lines, or polygons. Lines can be streets, pipelines, creeks, and railroads. Points could be fire hydrants, cell tower locations, building structures, or mileposts. Polygons represent areas in a GIS and can be city boundaries, county boundaries, Emergency Service Zone (ESZ) areas, lakes, and others.

This graphic and visualized data on a map enables quick analysis of information, making GIS an invaluable tool for public safety, by supporting the ability to rapidly assess situations and make decisions. Furthermore, by referencing all GIS data to a location on the earth's surface, precise location of features can be leveraged to significantly enhance call-routing capabilities.

5.1. Roles and Responsibilities

Understanding each contributing entity's roles and responsibilities will help to keep the process efficient and effective and minimize complication and duplication of effort. Clearly defined roles assist the entities in understanding the task order and duties that each role contributes to the whole process. Some common approaches to the plethora of responsibilities related to 9-1-1 geospatial data stewardship (i.e., creating, managing, storing, updating, correcting and coalescing GIS data) are provided in the figure below as considerations for further discussion at the state, regional, or local level.

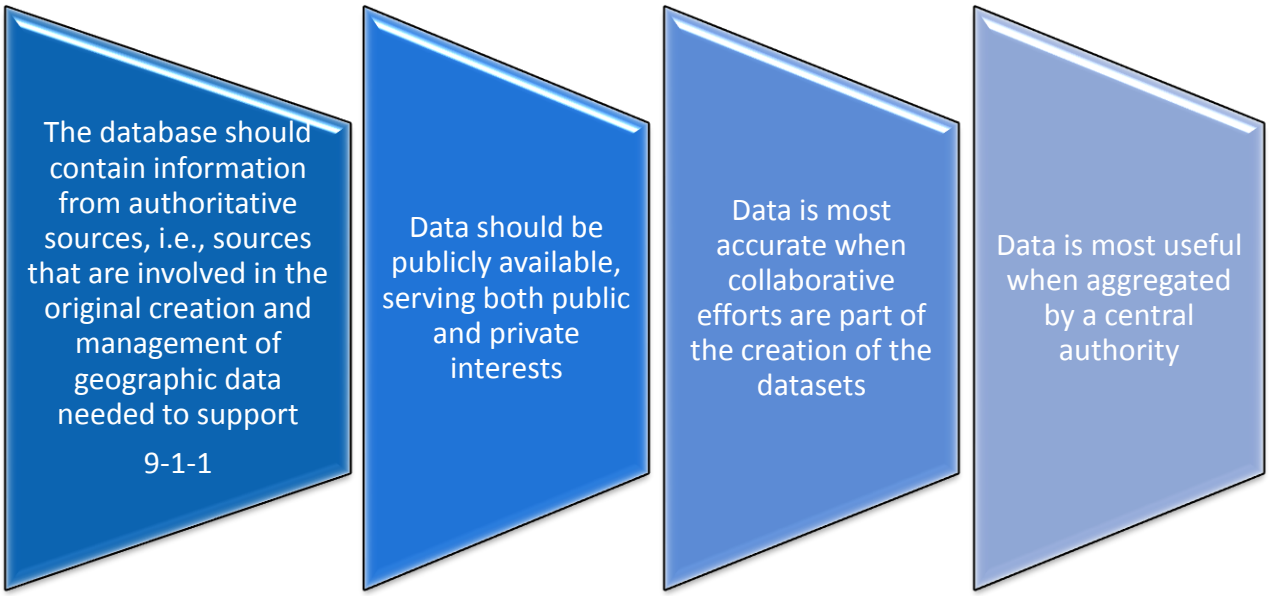

Figure 6: GIS Data Stewardship

- **State Authority Roles**
  - Project management
  - Educator and consensus builder for statewide or regionwide collaboration
  - Aggregator and validator of data from multiple sources
  - Initiation, development and maintenance of data standards and workflows
  - Communication with neighboring state and regional jurisdictions
  - Repository of statewide datasets
  - Provider of data portal and portal access/security, if applicable
  - Collaborator with other states to agree on a common data standard for data exchange between states that is based on NENA standards
  - Creator and maintainer of agreements when GIS Data Model standard is complete

- **County/Municipality/PSAP Jurisdiction Roles**
  - Point of contact (POC)
  - NG9-1-1 GIS data creation, maintenance and validation of local datasets; locals serve as the authoritative source for data and need to be responsible for the ongoing upkeep. The county/municipality may contract out the services (see Contractor/Vendor discussion) but the ultimate responsibility still resides with the local authority to see that the work gets done
  - Coordination with state GIS authorities
  - Communication with neighboring local jurisdictions
  - Coordinate with governmental sub-jurisdictions and public safety agencies within the jurisdiction
  - Synchronization of legacy elements such as Master Street Address Guide MSAG, automatic location identification (ALI) and NG9-1-1 datasets

- Local addressing authority coordination and communication

- **Tribal Government Authority Roles**[24]
  - Consideration of sovereign nation status of the tribes in your jurisdiction is very important and should be understood as a government-to-government relationship, similar to the relationship between the United States and China. Communication with tribal nations should be considered a request, not a requirement.
  - Point of Contact (POC)—Not all tribal governance structures are the same; check with local tribal authorities in your state or jurisdiction.
  - NG9-1-1 GIS data creation, maintenance and validation of tribal datasets—Be reminded that not all tribes have GIS and not all tribal areas have physical addressing. Some tribes rely on towns, cities or counties for public safety and physical addressing.
  - Obtaining "publicly available" data may require permissions from authorities, up to and including the Tribal Council, and may not be available outside of the community; in many cases, such data will not be considered public data
  - Communicate with tribal jurisdictions and the public safety agencies within those jurisdictions necessary to support NG9-1-1 within the tribal nation. A memorandum of agreement (MOA) should be considered.
  - Coordinate with adjoining governmental jurisdictions and public safety agencies contiguous to the tribal jurisdiction necessary to support NG9-1-1 within the tribal nation. Again, an MOA might be helpful.
  - Synchronize legacy and NG9-1-1 datasets that serve the tribal nation.
  - Local addressing authority coordination and communication within the tribal nation may or may not be via a local authority.
  - Coordinate and communicate with other GIS authorities in support of 9-1-1 service within the tribal nation and the state.

- **Regional 9-1-1 Authority Roles**
  - All responsibilities listed for counties, tribes and PSAPs listed above, plus the following:
    - Coordination with regional PSAP partners, local government(s), state and 9-1-1 service providers, telecommunications service providers, vendors and other stakeholders.
    - Coordination of regional datasets.

- **Federal Authority Roles**
  - Provide input to, and support for, national standards (e.g., the Federal Geographic Data Committee's Content Standard for Digital Geospatial Metadata, the National Spatial Data Infrastructure's National Standard for Spatial Data Accuracy, and NENA's NG9-1-1 GIS Data Model).
  - Identify who will operate or provide oversight for the national "Forest Guide" system, which serves as an index into state and regional ESInets. The operator/manager of the Forest Guide also should provide quality assurance services and serve as an arbiter between states/regions for emergency service coverage overlaps/gaps and other potential conflicts.

[24] Thank you and acknowledgment to the Gila River Indian Community GIS section in the Department of Land Use Planning and Zoning, and the Ak-Chin Indian Community for their input and advice for this section.

- Coordinate with state or regional authorities on the delineation of federal lands or facilities (e.g., military installations) where emergency services are rendered by the federal agency or department.
- All boundaries necessary in support of NG9-1-1 should be aggregated at the national level and that aggregation maintained at the national level.
- Aggregate and review location information available through the National Address Database (NAD)25 for use by appropriate federal agencies. The purpose of the NAD is to use the state and local government GIS data to build a minimum common database for open use. State and local data is likely to be much more comprehensive than is required by the minimum content defined at the federal level.
- Provide quality control checks and feedback to states that supply data to the NAD. Facilitate and coordinate feedback from users of the NAD.

- **Private Support Contractor/Vendors**

  Ownership, authority and direction over all aspects of the services provided by private support contractors and vendors for NG9-1-1 GIS remains with the contracting government entity.
  - Maintenance of NG9-1-1 GIS databases and systems.
  - Provide NG9-1-1 GIS software, services and support.
  - Creation of NG9-1-1 GIS databases.
  - Assist government entities with the development of internal policies, procedures and workflows, including tools and services.

- **NGCS Providers**
  - Support contractors/vendors needed to ensure that data is aligned with format specifications of the NGCS provider.
  - GIS specifications should be communicated early in the implementation process, so that all parties understand the requirements.
  - Work with the other data providers to ensure that data meets the specifications.
  - Responsible for loading data into the ECRF and LVF.

5.2. Cross-Jurisdictional Collaboration

Collaboration between and among jurisdictions is a vital component of success for developing GIS data for use in a NG9-1-1 environment. Response boundaries often cross jurisdictional boundaries, necessitating ongoing collaboration between jurisdictions for agreement on response boundaries to ensure appropriate resources are dispatched from the PSAP. The response to an emergency event often crosses jurisdictional boundaries and/or requires resources from surrounding jurisdictions for support through mutual aid; both scenarios strengthen the need for cross-jurisdictional collaboration. Prior to NG9-1-1, collaboration of GIS organizations between and among jurisdictions has not received the same priority of importance. Due to the requirements of GIS data in a NG9-1-1 system, the lack of collaboration no longer can be overlooked and must be strengthened to create contiguous geospatial datasets.

[25] See Appendix D for additional information on the NAD.

Alignment of GIS-related processes and data must be a priority before, during and after transitioning to NG9-1-1. Items to consider include the following:

- Policies: GIS policies differ from jurisdiction to jurisdiction from very open to very closed. The differences between jurisdictional policies can be a barrier and must be overcome to achieve success. When two jurisdictions have the opposite extremes, the process can be difficult. The first step to success is collaboration. Jurisdictions should focus on establishing minimum GIS data requirements (datasets) and mechanisms for data sharing.

  At a minimum, jurisdictions must focus on emergency service area boundaries, street segments and address location data. Specifically, the following GIS data layers must be included:

  - Provisioning boundaries
  - State boundaries
  - PSAP boundaries
  - Emergency service boundaries (emergency medical services [EMS], fire/rescue, law enforcement)
  - Road centerlines
  - Site/structure address points

- Standards: Standards include all aspects of NG9-1-1 GIS data, including but not limited to the frequency of data exchanges, the detailed requirements of attribute data within the NG9-1-1 GIS datasets and minimum quality control and assurance.

  - Frequency—The rate at which NG9-1-1 GIS data exchange must occur (hourly, daily, weekly or monthly)
  - Detailed Requirements—Minimum set of attributes required by all jurisdictions
  - Minimum Quality Control and Assurance—Minimum set of criteria required to ensure quality and accurate NG9-1-1 GIS data by all jurisdictions

- Processes: Processes include establishing mechanisms and methods to share NG9-1-1 GIS data. Mechanisms for exchanging NG9-1-1 GIS data can include GIS data portals, File Transfer Protocol (FTP) and email. The largest obstacle when establishing the data-sharing mechanism concerns the security of the systems and datasets. Security is an important component and all collaborating jurisdictions must agree to, and participate in, the security strategems. Automation of tasks where feasible will improve the efficiency of workflow processes.

- Procedures: Procedures include the actions and steps required to accomplish and fulfill the required policies, standards and processes.

5.3. Data Policy Discussion[26]

Establishing a collaborative and interstate data policy will define a common data model and set minimum accuracy benchmarks to be attained before local data is integrated into a statewide NG9-1-1 GIS dataset, and prior to the state data being integrated with that of other neighboring state jurisdictions. Existing and emerging industry standards at the national level should be consulted and considered in the development of NG9-1-1 standards for the integration of two or more state datasets. The result of such activity will be a reliable data policy document that can be used by states as a guide to keeping their GIS data updated and consistent to meet nationally recognized and accepted NG9-1-1 standards.

Establishing a data-sharing policy for the jurisdiction, region or state can provide the necessary framework and direction to ensure the flow of essential data for effective NG9-1-1 call processing. The data policy should discuss the goals of data sharing, establish the circumstances under which sharing should occur, delineate data-sharing responsibilities, outline the scope of data-sharing conditions, and describe the repositories of the shared data and access to those repositories. In addition, the policy should fully describe responsibilities regarding the repositories and data storage, security and data management.

Examples of state policy on GIS data can be helpful in providing guidance to other states contemplating establishing policy for their states. Two samples are available below:

- Iowa Homeland Security and Emergency Management Department, Next Generation 9-1-1 GIS Standards[27]

  The GIS data created following the standards outlined in this document will serve the purpose of validating civic address locations, defining PSAP and emergency services boundaries for the routing and transfer of 9-1-1 calls in Iowa, and defining the authoritative data sources at the local, regional, and state level. The resulting GIS data then can be coalesced and provisioned into the State of Iowa's NG9-1-1 system.

- (Draft) Minnesota Next Generation 9-1-1 GIS Data Standards, excerpt for ECN, Version 0.9, 8/4/2017

  The purpose of this document is to provide a state standard for each NG9-1-1 GIS dataset that is required for the transition to a GIS-based Master Street Address Guide (MSAG), Emergency Call Routing Function (ECRF), and Location Validation Function (LVF). These datasets include road centerlines, site/structure address points, PSAP boundaries, emergency service boundaries, and NG9-1-1 GIS data maintenance boundaries.

[26] This Photo by Unknown Author is licensed under CC BY-NC-SA
[27] http://www.homelandsecurity.iowa.gov/documents/911/911_IowaNG911Standards.pdf.

Public Versus Private Data

Understanding your own state's interpretation and definition of "public" versus "private" will be critical in framing the data management policy. Understanding your neighboring jurisdictions' (state or region) definition of public versus private data[28] is equally important. Expectations related to data must be set based on the state's legal interpretation of the terms.

Understand Legal Interpretations and Laws

Every state makes a different decision about what is public and what is private data. The state's interpretation will impact the data agreements and the integration of GIS data across state boundaries. Knowing what records or parts of records are "sharable" data will become part of the data policy.

Understanding the neighboring jurisdictions' view of data and whether the 9-1-1 data is considered public or private is essential and the 9-1-1 authority is advised to discuss this issue when developing the data-sharing policy and agreements between the jurisdictions.

Policy Mechanisms for Shared Data Across State Boundaries

The purpose of an interstate data policy is to provide a state standard for each NG911 GIS dataset that is required for the transition to a GIS-based MSAG, ECRF, and LVF. These datasets include road centerlines, site/structure address points, PSAP boundaries, emergency service boundaries, and NG9-1-1 GIS data maintenance boundaries.

Frequency of Data Updates

Data policy should be established that describes the agreed-upon frequency of data updates. The state authorities should discuss and concur on an established process and timeline for updates and identify the responsible parties for carrying out the updates. Communication between the states or authorities should be frequent and adherence to the policy should be documented**.**

The 9-1-1 authority must identify the data steward for each of the datasets. The 9-1-1 authority and the data steward should work together to ensure that, as this data is updated, the affected PSAPs have access to the most-current data possible, and all data stewards are appropriately notified of the updates. It is imperative that the data available to the NG9-1-1 system is as accurate as possible and mirrors the real world as precisely as possible. In the case of road centerlines, updates can occur as often as daily, as new subdivisions are platted or large parcels of land are subdivided. If multiple jurisdictions are served by the 9-1-1 jurisdiction, these relationships must be cultivated with the data stewards at every jurisdiction to ensure that all data is kept current. Automated quality assurance processes should improve upon human limitations regarding data integrity.

[28] Photo by Unknown Author is licensed under CC BY-NC

Data Accuracy

As discussed in Chapter 1 of the Interstate Playbook, at a minimum, NG9-1-1 requires road centerlines with address ranges and boundary files for the 911 jurisdictions within their boundaries, as well as the response areas for law enforcement, fire/rescue and EMS. It is imperative that the 9-1-1 authority includes in its data policy an expected level of data accuracy and establishes processes to ensure the agreed-upon threshold for achieving accurate data for NG9-1-1 purposes.

5.4. Alignment of Shared Data Policies and Standards

Regional or interstate implementations can encompass geography from multiple states and thus, even more data stewards will be involved in the process. Interlocal agreements may be required to bring resolution to conflicting policies and laws, and/or to provide budgetary guidance. These agreements should provide guidance to the data stewards regarding data handling, management, and modifications necessary to permit data aggregation for use with NG9-1-1 solutions in an interstate ecosystem.

Data Maintenance

The question of who can update or change data should be determined by the state or local 9-1-1 authority. This can be done either internally by the state or local entity personnel, or externally through a contractor. Identifying who has access to the data—and more importantly, how current and complete the data is—must be known and understood. Where there is a need to provide emergency response beyond the jurisdiction's border, the 9-1-1 authority will need sufficient information and will need a mechanism in place to require notification of any updates, changes or spatial features that will have an impact on call routing. During the transition period from legacy to NG, and because of the way telephone exchange boundaries frequently overlay the state boundary line, the need to build the coverage area of GIS data, commonly referred to as a buffer layer, across the border will exist. While this is simply good practice regardless of the state of transition, it is especially important when transitioning from legacy to NG. The need to agree upon the common border with a neighboring state absolutely needs to be coordinated and is strongly encouraged. NG9-1-1 data should be maintained to the current standard described in the NENA NG9-1-1 GIS Data Model.

Data Security[29]

There are many methods and practices used to protect data; the "CIA triad" (confidentiality, integrity, and availability) described below is used commonly because of its simplicity and ease of understanding. This is not to suggest that all security threats can be prevented using this methodology, but rather, it is a starting point for more detailed and technical conversations within each entity. A formal security plan should be drafted after the NG9-1-1 infrastructure has been determined to ensure proper alignment with network protocols and procedures.[30]

Confidentiality

Protecting confidentiality hinges upon defining and enforcing appropriate access levels for information. Doing so often involves separating information into discrete collections organized by who should have access to it and how sensitive it is (i.e., how much and what type of damage would be suffered if confidentiality was breached).

Integrity

Some data should not be modifiable at all, such as user account controls, because even a momentary change can lead to significant service interruptions and confidentiality breaches. Other data must be much more available for modification than such strict control would allow, such as user files. Any modifications should be reversible as much as reasonably possible in case of changes that later may be regretted (such as accidentally deleting the wrong files). For circumstances where changes should be easy for authorized personnel, but easily undone, version control systems and more traditional backups are among the most common measures used to ensure data integrity.

Availability

Systems, access channels, and authentication mechanisms all must be working properly to ensure that the information they provide and protect is available when needed. High Availability (HA) systems are those computing resources whose architectures are oriented specifically toward improving availability. The HA level that an agency desires needs to be weighed against the cost of providing it. Typically, these systems are not part of the call flow and therefore agencies need to determine the cost benefit to having an HA system for processing this data. For example, an HA level of 99.9 or 99.99 might be an acceptable trade-off for lower cost. Depending on the specific HA system design, it might target power outages, upgrades, and hardware failures to improve availability, it might manage multiple network connections to route around network outages, or it might be designed to deal with potential availability problems such as denial of service (DOS) attacks.

[29] https://www.techrepublic.com/blog/it-security/the-cia-triad/
[30] Photo by Unknown Author is licensed under Creative Commons.

5.5. Interlocal Agreements for GIS Data Sharing

As discussed in Chapter 1 of the Interstate Playbook, an Interstate Cooperative Agreement (ICA)—known also as a Memorandum of Understanding (MOU), Memorandum of Agreement (MOA), Cooperative Agreement or Interstate Agreement (IA)—is the mechanism used by governing bodies or authorities that outlines the roles, authority, contributions and guidelines for which the parties to the agreement have concurred. Such an agreement identifies the responsibilities of the parties, any financial obligations or understandings, and demarcation of tasks or duties, and often is used to clarify policies of the participants. Informal agreements are fine for modest projects but a complex undertaking such as validation of data used for 9-1-1 call routing or response demands a more formal approach to how the jurisdictions will integrate their services and maintain accountability.

A GIS-related agreement might include such topics as agreed-upon accuracy levels, access rules and credentials, notification procedures, approval mechanisms, and data update schedules.

See the standards identified in this section and reference Chapter 1 for more information on IAs, as well as a sample agreement document.

http://www.oregon.gov/oem/Documents/sample_gis_data_sharing_agreement.pdf

https://www.co.mason.wa.us/interlocal-agreements/MACECOM-GIS.pdf

5.6. Local/Statewide Standards and Policy

State or local 9-1-1 and GIS authorities are encouraged to work together to agree upon a common boundary and supporting data. Collaboration will assist in the development of common datasets and can help avoid lengthy legal discussions or formal agreements. However, if these are necessary to accomplish the comprehensive development of shared and usable data, legal data-sharing agreements should not become a hindrance to achieving the goal.

As part of the collaborative discussion, topics that should be considered include the following:

Table 1: Standards Policy Considerations

Common Border Agreement	If the states can agree on a common border for 9-1-1, the usability and reliability of the data is enhanced. Common border agreement allows for the edge matching that is necessary to ensure minimal gaps and overlaps.
Address Ranges	Along jurisdictional boundaries, when a road segment forms the boundary between PSAP service areas, the data steward shall include only those address ranges for which they are responsible.

Border Roads	Roads that form the border between authoritative boundaries, such as counties, will be present in the data of more than one agency. Each agency is responsible for the attributes on the side of the line segment associated with addresses in its jurisdiction.
Aggregate Data	Data collection procedures will vary depending on budget constraints and the availability of existing source materials. However, an aggregated dataset for the entire state should be the goal. The ultimate quality, usefulness and reliability of the GIS data is dependent on the source data and the methods used to incorporate the data into the compiled GIS datasets.
Authoritative Boundary	GIS data will be provided from a variety of sources for merging into the overall statewide layers used for NG9-1-1. The authoritative boundary represents the boundary scope (city, county, region) for which the GIS data is provided. For example, if a city provides data directly, the authoritative boundary is a single polygon for that city boundary. If the city provides data to the county, and thus the county is the authoritative source of data used in statewide data layers, then the county boundary becomes the single polygon for the county as the authoritative source. The same holds true if multiple counties supply data to a regional entity. Each authoritative source provides a single polygon boundary, and those boundaries become aggregated at the state level where no overlaps or gaps are allowed. This layer is what is used in the reporting of discrepancies back to the source for correction. It should be noted that the authoritative boundary is for 911 response and call routing only, and may differ from the legal boundary of the state.[31] If a common border and authoritative boundary is agreed upon at a state level, edge matching should not be needed.
Determine Common Data Model	Collaboration between and among states regarding the development of a common data model is required. During development, the NENA GIS Data Model should be heavily consulted in the creation of a state specific data model. The purpose of the NENA GIS Data Model is to ensure that GIS data meets all requirements for NG9-1-1 civic location validation and call routing, and that it incorporates all requirements for these systems. It is highly encouraged that the baseline of the NENA GIS Data Model be utilized; however, additional attribution needed for state and local requirements should be examined and added as necessary. It is imperative that states or regions be willing to **exchange** GIS data in a

[31] Iowa Homeland Security and Emergency Management Division, NG9-1-1 GIS Standards, 5.5, pg. 38. https://www.homelandsecurity.iowa.gov/documents/911/911_IowaNG911Standards.pdf.

	model which, at a minimum, meets all requirements of the NENA NG911 GIS Data Model. What states or regions choose to do internally regarding data models is a local choice, but when it comes to **sharing** or **exchanging** data**,** there must be agreement on a common baseline. Additionally, a common data model will aid in data sharing between jurisdictions. It is the responsibility of each 9-1-1 authority to ensure that all GIS development and maintenance vendors are informed of its specific data model requirements. It is also the responsibility of the 9-1-1 authority to ensure that the data model requirements are met. 9-1-1 authorities also should be aware of the requirements of their computer-aided dispatch (CAD) software and locally may need to add additional requirements for these systems beyond any state-developed common data model. It is important to be aware of all GIS requirements for legacy systems during the transition to NG9-1-1.
Edge-Matching Road Centerline Meet Points	Once the coverage region of an ESInet has been agreed upon between bordering states or regions, the entities also should endeavor to agree upon common meet points for road centerline end points. The end points should be coincident with the coverage region edge and serve as a terminating or starting vertex for each agency's road centerline geometry as those features cross the coverage region edge. While not required for proper call routing or location validation, such coordination will help ensure that topology needs are met for point-to-point routing of emergency response vehicles.
Emergency Service Boundaries—PSAP jurisdiction, fire/rescue, law enforcement, EMS, and others) agreeing on all boundaries	Collectively the PSAP boundaries served by a given ESInet define the geographic extent of the 9-1-1 service area for that ESInet. This merged collection of PSAP boundaries and its collective served area is known as the ESInet's coverage region. It is critical that the outermost edge of the coverage region is coincident with coverage regions from neighboring states or regions. Therefore, it is incumbent upon states and regions to work together to determine an agreeable coverage region edge, ensure that these edges are coincident with each other and ensure that changes to one state's or region's coverage region is also reflected in the adjacent state's or region's coverage region. Fire/rescue, law enforcement and EMS boundaries are bound by the extent of the ESInet's coverage region. As such, no fire/rescue, law enforcement or EMS boundaries are allowed to overlap the outermost edge of the coverage region. In cases where fire/rescue, law enforcement, or EMS boundaries do overlap the agreed-upon coverage region edge, the adjacent jurisdictions each should have a boundary that reflects the fire/rescue, law enforcement or EMS agency's service area on their side of the coverage region's edge.

Data Frequency	How often is the data going to be updated and refreshed? Determination of the update frequency must be agreed upon by all participating entities and the NG9-1-1 call-routing provider. Accuracy benchmarks should include agreed-upon update frequency, topology rules, synchronization between legacy 9-1-1 databases during migration to a NG9-1-1 system, and insurance of mandatory attribution to all required NG9-1-1 GIS data layers utilized within the NG9-1-1 call-processing system.
NG911 GIS Provisioning Boundaries[32]	This is a boundary defining the area of GIS data provisioning responsibility, with no unintentional gaps or overlaps. This boundary must be agreed upon with all adjoining data provisioning providers (municipalities, counties, regions, states). Only the NG911 GIS data within this boundary should be submitted to a state and/or spatial interface[33] provider for quality assurance/quality control and ultimately for submission to the statewide NG9-1-1 GIS dataset. This boundary also may be used by the Forest Guide to determine coverage for a data provisioning authority. This boundary determines the entity responsible for completing discrepancy resolution for the submitted dataset.
Quality Assurance	Determining minimum accuracy benchmarks for each dataset will assist the GIS data authorities in ensuring usable and reliable data for 9-1-1 call processing. It will also enhance the data for use in other applications. Communicating the need for accuracy, especially as it relates to 911 use, is of supreme importance. While GIS accuracy is always a goal no matter the purpose of using the data, it is critical for 9-1-1 and the urgency of providing accurate data that is updated in a timely manner is essential. Near real-time updates are needed due to the necessity of accuracy.

[32] NENA Standard for NG9-1-1 GIS Data Model, NENA-STA-006.1-201X (DRAFT)

[33] A Spatial Interface (SI) provides a standard interface for geospatial data, made available by authoritative sources, to be used by a wide distribution of consumers including functional elements within NGCS. SIs can be integrated into a GIS or operate as a standalone solution, and may include various feature capabilities, such as data coalescing and quality assurance/quality control (QA/QC). An SI is not in the immediate path of the call flow; however, it should function in near real-time, enabling changes to authoritative data to be used by ECRF/LVF functions supporting call routing and location validation.

5.7. National GIS Standards and Guidelines

NENA has demonstrated a significant leadership role for a GIS data model so that the exchange of information is consistent and reliable.

Compliance with NENA-recommended standards and guidelines is strongly encouraged. States, regions and PSAP authorities are encouraged to monitor NENA's website for the most current document updates and release of draft standards or guidelines that may be distributed for public comment.

Please consult Appendix A in this chapter for a list of pertinent NENA GIS standards.

Additional references are provided in the Support References and Recommended Reading section at the end of this section.

5.8. Census Bureau Baseline Data

Census information can serve as a good starting point for baseline data but it must be supplemented for use in NG9-1-1 call-routing applications because the Census data contains state jurisdictional boundaries but does not include response boundaries. There is no question that state and local authorities need to work collaboratively with the Census Bureau to use its boundaries as validation of state boundaries. However, complications can arise regarding what is sharable data from the Census Bureau. Frequently, datasets of value to 9-1-1 or emergency response entities exist but are prohibited from being used due to restrictions in law.

Title 13 of the Census Address List Improvement Act of 1994 provides certain protections regarding confidential information. No one in the Department of Commerce or any bureau or agency, or local government census liaison, may:[34]

1. Use the information furnished under the provisions of this title for any purpose other than the statistical purposes for which it is supplied.
2. Make any publication whereby the data furnished by any particular establishment or individual under this title can be identified.
3. Permit anyone other than the sworn officers and employees of the Department or bureau or agency thereof to examine the individual reports. No department, bureau, agency, officer, or employee of the Government, except the Secretary in carrying out the purposes of this title, shall require, for any reason, copies of census reports which have been retained by any such establishment or individual. Copies of census reports, which have been so retained, shall be immune from legal process, and shall not, without the consent of the individual or establishment concerned, be admitted as evidence or used for any purpose in any action, suit, or other judicial or administrative proceeding.

[34] "except as provided in section 8 or 16 or chapter 10 of this title or section 210 of the Departments of Commerce, Justice, and State, the Judiciary, and Related Agencies Appropriations Act, 1998.1"

Communication with the Census Bureau should be bidirectional and always should seek to share what is shareable while protecting the rights of the individual.

5.9. National Address Database

The U.S. Department of Transportation (USDOT) and its partners from all levels of government recognize the need for a National Address Database (NAD). Accurate and up-to-date addresses are critical to transportation safety and are a vital part of NG9-1-1. They are also essential for a broad range of government services, including mail delivery, permitting, and school siting. To date, there has been no national database of address points in the public domain. In many cases, such data already exists at the state and/or local level, and USDOT believes that a NAD can be built starting at the state and local level and aggregating up to the national level.

By integrating local and state efforts into developing and maintaining a NAD, it is hoped that the nation will have consistent and current address data that could be used by all levels of government for public safety, emergency response, community aid after catastrophes occur, highway safety, and the delivery of many other services to benefit the public.

For more information on the NAD, please see Appendix D.

5.10. Summary

A GIS and the associated statewide data layers are the foundation of a NG9-1-1 system. Geospatial data, including address points, road centerlines, and emergency service boundaries, should be locally developed and maintained and then combined into a statewide geodatabase. All location information required to support NG9-1-1 call routing should be derived from the assembled statewide geodatabase. It is essential that this information is accurate, authoritative, standardized, current, and accessible. Data policies should be developed to administer all GIS aspects (for example, people, processes, data, and systems) and to ensure consistency in the application of standards across all jurisdictions. Additionally, change management procedures should be developed and followed to ensure effective system management. Without accurate GIS data to drive NG9-1-1, systems will be less than effective.[35]

Considerations and Best Practices

- Start sooner than you think might be necessary—the process takes longer than anticipated
- Maintain a consistent and open coordination environment to facilitate more-frequent sharing of data and incident response best practices between state/regional/PSAP authorities
- Collaborate with other state/regional/PSAP 9-1-1 and GIS authorities to establish program metrics and measurable milestones
- Consult and follow NENA GIS data standards and local agreed-upon standards
- Mutually develop a data-sharing policy across borders
- Establish a common border agreement

[35] http://www.kansas911.org/wp-content/uploads/2017/07/Kansas_NG911_Governance_GIS-Policy_20150306.pdf.

- Agree on common datasets
- Identify GIS data stewards at local, state and federal levels
- Develop common GIS data policies and processes across the service area, based on current NENA and local standards
- Understand data definitions and legal requirements regarding data access

Key Focus Points

- GIS boundaries are for 9-1-1 response and call routing only and often differ from the legal boundary of the state
- Determine who owns the data, when it is collected and when it is updated
- Edge matching for gaps and overlaps should not be needed if a common boundary is agreed upon
- The NAD is a minimum content guideline and can/should be used for reference, but note that it will not meet the needs of NG9-1-1 and is not currently NENA standards compliant

Support References and Recommended Reading

- NENA Information Document for Synchronizing Databases with MSAG & ALI, 75-001, Version 1.1, September 2009, http://www.nena.org/?page=synch_gis_msag_ali

- NENA Standard for NG911 GIS Data Model, NENA-STA-XXX (DRAFT),[36] National Emergency Number Association (NENA) Core Services Committee, Data Structures Subcommittee, NG9-1-1 GIS Data Model Working Group

- NENA-STA-010.2-2016 (originally NENA 08-003), Detailed Functional and Interface Standards for the NENA i3 Solution, Version 3, http://www.nena.org/?page=i3_Stage3

- NENA-INF-008.2-2014 (originally NENA 77-501), NG9-1-1 Transition Plan Considerations Information Document, http://www.nena.org/?page=NG911_TransitionPlng

- NENA 02-011-v7.1, NENA Data Management for Local Exchange Carriers, ALI Service Providers & 9-1-1 Jurisdictions, http://www.nena.org/?page=911DataManagement

- NENA-STA-005.1.1-2017, NENA Standards for the Provisioning and Maintenance of GIS Data to ECRF/LVF, http://www.nena.org/?page=ProvGISECRFLVF

- NENA-STA-004.1-2014, March 23, 2014, NENA Next Generation 9-1-1 (NG9-1-1) United States Civic Location Data Exchange Format (CLDXF), http://www.nena.org/?NG911CLDXF

- NENA Master Glossary Of 9-1-1 Terminology, NENA ADM-000.17, National Emergency Number Association (NENA) Development Steering Committee (DSC), September 9, 2013, http://www.nena.org/?page=Glossary

[36] This standard is not yet completed through the NENA committee process. Refer to NENA website for latest edition.

- Additional NENA references on NG9-1-1:
    - http://www.nena.org/?NG911_Project
    - http://www.nena.org/?page=Standards
- Kansas NG9-1-1 GIS Data Model, Version 2.1, GIS Committee on Behalf of the Kansas 911 Coordinating Council, November 8, 2017, http://www.kansas911.org/wp-content/uploads/2017/11/kansas_ng911_gis_data_model_v2_1_final.pdf
- Kansas NG911 Geographic Information System Governance Policy, http://www.kansas911.org/wp-content/uploads/2017/07/Kansas_NG911_Governance_GIS-Policy_20150306.pdf
- NSGIC[37] Top Ten List for State Coordinators, https://nsgic.memberclicks.net/index.php?option=com_content&view=article&id=63:saving-lives&catid=25:advocacy&Itemid=144
- National Geospatial Advisory Committee (NGAC), The Need for a National Address Database, December 2012, https://www.fgdc.gov/ngac/meetings/december-2012/NGAC%20National%20Address%20Database%20Paper.pdf
- National Geospatial Advisory Committee (NGAC), The Need for a National Address Database – Use Cases, December 2014, https://www.fgdc.gov/ngac/meetings/december-2014/ngac-national-address-database-use-case-paper-december-2014.pdf
- National Address Database Summit Report, https://cms.dot.gov/sites/dot.gov/files/docs/1%20NAD_Summit_Report_0.pdf
- National Address Database Schema, https://www.transportation.gov/nad/schema
- National States Geographic Information Council (NSGIC) http://www.nsgic.org

[37] National States Geographic Information Council—NSGIC is a state-led sharing of best practices for GIS. NSGIC (http://www.nsgic.org) promotes the efficient development and management of location-based information resources, and advocates for innovative, strategic use of these assets to advance the interests of states, tribes, regions, local governments and the nation.

6. Interim SMS Text-to-9-1-1 Overview

Text-to-9-1-1 service is being deployed in PSAPs nationwide. The solution being deployed is defined as an interim text-to-9-1-1 solution that uses commonly available, carrier native SMS technology. When this service is deployed, wireless subscribers with text capabilities can send an SMS message to a PSAP by typing the 9-1-1 emergency code into their mobile device.

Interim SMS text-to-9-1-1 service can benefit individuals in emergency situations when they are unable to safely make a voice call, as well as individuals who are deaf, hard of hearing, and/or speech impaired. These are not the only individuals who can benefit from interim SMS text-to-9-1-1 service. However, the common message within the public safety community is, "call if you can, text if you can't," as it is often faster to get answers and help to individuals when they are able to speak their location and provide other details about the emergency. In areas where interim SMS text-to-9-1-1 service has been deployed, it is reported that the overall impact of the service has been minimal and that the majority of requests for assistance are still made via a voice call.

Although text is being deployed at the same time as NG9-1-1 and i3 services, text-to-9-1-1 is not synonymous with NG9-1-1. Interim SMS text-to-9-1-1 service can be deployed prior to a PSAP initiating steps toward NG911. The primary focus of this section of the Playbook is on interim SMS text-to-9-1-1 solutions, interstate text transfers, deployment considerations, and experiences to support planning of interim SMS text-to-9-1-1 service for a PSAP, region or state. NG9-1-1 and i3 solutions are covered in Section 3.0 of this chapter of the Interstate Playbook.

6.1. Text Deployment Solutions and Options

With the technology available today, interim SMS text-to-9-1-1 service can be deployed at a PSAP using one of three solutions: ESInet/IP i3 integrated service, web service and teletypewriter (TTY)/telecommunications device for the deaf (TDD) service.

Integrated Service: With the integrated service, the PSAP has connectivity to an ESInet or has established IP connectivity to a designated Text Control Center (TCC) and has IP capable call-handling equipment. The text messages are delivered directly to the PSAP's CPE interface.

Web Solution: This solution requires a PSAP to have internet access and a separate web portal for responding to text-based emergency calls. This web portal would be opened at the beginning of the shift and would need to be monitored for incoming text messages. This solution may require a separate monitor for the web portal; however, some equipment manufacturers have incorporated the portal into the 9-1-1 display.

TTY/TDD: The final option is for text to be deployed using the PSAP's TTY/TDD trunks. With this option, the text is delivered to the PSAP and displayed on the 911 equipment exactly like a TTY call. This does not eliminate the original functionality of the TTY/TDD device but allows text to also be deployed using the device. The text message is delivered via the existing 9-1-1 trunks, so once a text is delivered via this method, the 9-1-1 trunk will be tied up and unable to accept another call or text session. The trunk will remain tied up until the call-taker ends the text session.

The first two options, integrated and web service, are the most commonly deployed solution.

PSAP capabilities, technology and regional factors all can play a role in the decision as to what solution to deploy. A more thorough description of the different services can be found using the reference, Interim SMS Text-to-9-1-1 Information and Planning Guide.[38]

Deployment Strategy

In addition to choosing a technology solution, a PSAP, county or state should consider the deployment strategy for interim SMS text-to-9-1-1 service. There are many different options for how such service can be deployed. For example, deployment can occur at the PSAP, county, regional, or statewide level. It is recommended that, at a minimum, text-to-9-1-1 service be approached at a county level to avoid public confusion and differing levels of service. Because of the nature of wireless phones, it is possible that a text placed near a PSAP boundary will route to the neighboring jurisdiction. If only one PSAP is deployed with interim SMS text-to-9-1-1 service, this can present an operational challenge as the receiving PSAP would have to relay the text information to the undeployed PSAP, which takes precious time and introduces the possibility of error.

It also is recommended that PSAPs consider the solution being deployed in their neighboring PSAPs, including those neighbors across state boundaries. There are interoperability considerations that should

[38] https://c.ymcdn.com/sites/www.nena.org/resource/resmgr/Docs/SMS_Text_Info_and_Planning.pdf.

be evaluated, as deploying the same type of solution may provide functionality not available across the different solutions. Information on PSAPs that have deployed interim SMS text-to-9-1-1 service and the solution deployed can be found by reviewing the PSAP Text-to-911 Readiness and Certification Form.[39]

County, regional, and statewide deployments can be coordinated so that all PSAPs deploy service in the same timeframe, or a single PSAP may be identified as the entity that will receive text messages for the other PSAPs in the county, region or state. When multiple entities collaborate to deploy 9-1-1 text service, proper coordination is needed to ensure development, agreement and understanding of methods and procedures to be used when handling text requests.

Steps for Interim SMS Text-to-9-1-1 Deployment

Once a decision is made regarding the deployment strategy, the PSAP, region or state needs to follow several steps to complete the text-to-9-1-1 deployment process. The figure below illustrates the typical process that an interim SMS text-to-9-1-1 deployment strategy would follow.

Figure 7: Interim SMS Text-to-9-1-1 High-Level Deployment Phases

[39] https://www.fcc.gov/general/psap-text-911-readiness-and-certification-form.

PSAP Readiness

The PSAP that will be receiving SMS text messages needs to ensure text readiness by following the details for the solution chosen that is provided in the reference, Interim SMS Text-to-9-1-1 Information and Planning Guide.[40]

Text Control Center Connectivity

The TCC is responsible for receiving an SMS text and forwarding that request to the correct PSAP for proper handling. As such, TCC interconnection is another step necessary prior to a PSAP's ability to declare being technically ready to deploy interim SMS text-to-9-1-1 service and submit a request for service letter.

Request for Service Letter

Upon completion of the steps necessary to determine technical readiness, CPE readiness and TCC connectivity, a PSAP can submit a request for service by completing the PSAP Text-to-911 Readiness and Certification Form[41] located on the FCC's website. The form asks the PSAP to provide the information below and complete the registration process by sending the document to T911PSAPREGISTRY@fcc.gov.

- Date of submission
- Name and contact information of person submitting the form
- PSAP's facility information, including FCC-issued PSAP identification number, longform name of the facility, physical address, and county of operation
- PSAP's point of contact information for text-to-911 coordination
- PSAP's method to receive texts (integrated, web browser or TTY/TDD)
- Identification of the authorizing state or local entity
- Certification that the PSAP is technically ready to receive texts

Submission of the form initiates the deployment process with the wireless carriers. Upon receipt of the change request form, they have 180 days or six months to activate interim SMS text-to-9-1-1 services.

The FCC's Communications Security, Reliability and Interoperability Council (CSRIC) IV created a best practices document[42] to provide PSAPs with additional information on requesting, testing and deploying interim SMS text-to-9-1-1 service.

Operational Planning

While preparing for testing and deployment, the PSAP also should update methods and procedures documents to include information for responding to interim SMS text-to-9-1-1 calls

[40] https://c.ymcdn.com/sites/www.nena.org/resource/resmgr/Docs/SMS_Text_Info_and_Planning.pdf.
[41] https://transition.fcc.gov/pshs/911/PSAP_Readiness_Certification_Form-OMB_3060_1204-Thru_43018.doc.
[42] CSRIC IV Working Group 1 subgroup 1 Task 2 Report https://www.fcc.gov/about-fcc/advisory-committees/communications-security-reliability-and-interoperability-0.

from wireless subscribers. In addition, the PSAP should ensure that all staff are trained on system functionality and understand how to use the system prior to testing and deployment.

For reference, the State of Minnesota's *Text-to-911 Statewide Operational Standards* is included in Appendix F.

Field Testing

Field testing is the final step before deployment, and should include the PSAP, wireless carrier, TCC provider, CPE vendor and CAD vendor. Sample test procedures for each of the solutions can be found in the CSRIC IV document[43] referenced in Section 1.2.3.

As the Interstate Playbook is focused on interstate connectivity and testing, the focus of this field-testing section is the ability to test interstate functionality of interim SMS text-to-9-1-1 deployments. As PSAPs deploy text service, there is a need to support both transfers across ESInets and interstate text transfers to ensure seamless support of users in need of help. This highlights the importance of understanding the capabilities of the text solution, TCC providers and neighboring PSAPs, both intrastate and interstate, to ensure proper testing and configuration between PSAPs.

The PSAPs should be prepared to participate in testing with the wireless carriers and ensure that the TCC and carriers understand the PSAPs' testing requirements. Each PSAP should communicate the desired outcome of the testing, how the testing should be conducted with its staff, how test documentation should be collected, and what expectations the PSAP has about the testing process. The PSAP should be prepared to involve neighboring PSAPs in this testing.

Text Transfer Testing

As with the need to test and validate the ability to transfer voice between states and ESInets, where available, it is important to test texting capabilities between PSAPs, states and ESInets. This testing helps ensure an understanding of the routing capabilities to other text-capable PSAPs, helps educate the PSAPs on the treatment of the messages being transferred, and will ensure any issues or nuances are identified concerning the ability to transfer text messages.

It is important to note that the ability to transfer texts is not included in the ATIS J-STD-110 document, which defines the requirements and architecture for the interim SMS text-to-9-1-1 solution. Therefore, at the time of this writing, transfers are not supported universally by all TCC providers across all three of the solutions. It is important to consider the PSAP's need to transfer texts when selecting a provider and solution.

In preparation for testing transfers with interim SMS text-to-9-1-1 service, the following steps should be addressed to ensure successful testing and seamless transfer of texts between jurisdictions:

- Identify PSAPs along the border of the states, ESInets, counties or PSAPs that can receive texts
- Identify the type of text-to-9-1-1 solution (integrated, web solution or TTY/TDD)

[43] Ibid.

- Identify the TCC provider that is planned or deployed in each border PSAP and/or region(s)
- Gather information on the CPE that is used by each PSAP, if appropriate
- Gather any existing policies developed for handling interim SMS text-to-9-1-1 callers
- Meet with neighboring PSAPs and the solution provider to establish a schedule and identify expectations and how testing will be conducted

Interstate Test Case Development: Interim Text-to-9-1-1 Transfers

The states of Iowa, Minnesota, North Dakota and South Dakota worked to identify test cases to demonstrate and document the results of interim SMS text-to-9-1-1 transfers between states and jurisdictions. They felt it was important to test between different deployment solutions and CPE vendors, where possible. The parties agreed upon a test case tracking method and three test cases to ensure the necessary functionality of interim SMS text-to-9-1-1 transfers. The information below is a summary of the fields used to track testing results.

- Test Case: This indicates the CPE types of the two jurisdictions testing SMS text transfers
- Originating PSAP: The PSAP initiating the text transfer
- Originating Equipment: The CPE type and software version
- Terminating PSAP: The PSAP receiving the text transfer
- Terminating Equipment: The CPE type and software version
- Type: The solution deployed at the two PSAPs
  - IntraTCC
  - InterTCC
- Testing Criteria: The test case being executed
- Testing Details:
  - Date
  - Time
  - Result
  - Comments

Three test cases were identified to verify text transfers between states, including:

- Transfer of text from initiating PSAP to terminating PSAP
- Transfer of text from initiating PSAP to terminating PSAP and back to initiating PSAP
- Ability to establish a private text between the initiating and terminating PSAP

Interstate Test Case Results: Interim SMS Text-to-9-1-1 Transfers (Minnesota/North Dakota Experience)

In the case of the states noted above, each agree that establishing the capability to test text transfers between states is important. An example of this arrangement and testing was demonstrated by North Dakota and Minnesota. These two states were able to successfully complete text transfer testing between the Red River Regional Dispatch Center in North Dakota and the Beltrami County PSAP in Minnesota. A tester was in Polk County, Minnesota, and the text placed successfully routed to the North Dakota PSAP, as they handle 9-1-1 for

Polk County. The two PSAPs then were able to successfully prove the test cases discussed in Section 1.2.5.1.2 above, with each PSAP acting as the initiating PSAP.

Appendix E includes a copy of the test cases and considerations when testing text-to-9-1-1 transfers.

Deployment

When the testing has been deemed successful, the PSAP or region will receive emergency text messages. The PSAP may choose to wait before notifying the public of deployment; this time period between activation and the public announcement regarding the launch of service can be used as a continuing internal testing and training period.

Prior to "go live," the PSAP, region or state should prepare a public relations initiative that is available to notify and educate the public about the service.

Public Awareness and Education

In addition to planning the solution and technology deployment, it is important to prepare a public education campaign. Properly managing the expectations of the public and special interest groups about availability and proper use of interim SMS text-to-9-1-1 service is an important consideration for all such deployments, as the technology for text does not work the same as voice calls. NENA has numerous resources to support considerations for a public education campaign[44] including:

- Identify target audience and how messaging will differ for each
- Identify key messaging, for example:
  - "Call if you can, text if you can't"[45]
  - May take longer to receive a response to text than a call
  - Text-to-9-1-1 service is not available while roaming
- Timeframe for launch and coordinated messaging
- Types of outreach

6.2. Future Considerations

The FCC order DA 17-1084 amended the Commission's rules to facilitate the move away from TTY for persons who are deaf, hard of hearing, deaf-blind or have a speech disability. The order was effective January 1, 2018, and required wireless carriers to support 9-1-1 communications and to be backward compatible with TTY. Unlike the interim SMS text-to-9-1-1 solution, which required a PSAP jurisdiction to request the service, wireless carriers are required to support Real Time Text (RTT) to 9-1-1 communications nationwide. Until a PSAP is capable of receiving full end-to-end RTT, it will either be converted by the wireless carrier or the ESInet provider to TTY Baudot coding (in some form) and

[44] http://www.nena.org/resource/resmgr/Standards/NENA-REF-003.1-2015_Texting_.pdf.
[45] Text-to-9-1-1 Public Education Logo Package; http://www.nena.org/?page=textresources.

handled as TTY messaging to the PSAPs using voice channels through Enhanced 9-1-1 (E9-1-1) or transitional NG9-1-1 systems.

Full end-to-end RTT service requires IP interconnection between the wireless carrier and the NG9-1-1 system, IP from the NG9-1-1 system to the PSAP, and compatible PSAP call-handling software to receive and support RTT. A growing number of PSAPs are IP connected from NG9-1-1 but may not have RTT-compatible software in place. Therefore, it remains to be seen how many full RTT service requests will develop as 2018 proceeds.

Considerations and Best Practices

- Consult NENA standards to help plan your deployment approach
- Engage your network, CPE and TCC providers early in the process
- Upon submission of the request for service, wireless carriers have 180 days to turn up text service
- Work with your CPE vendor early to understand CPE capabilities for supporting integrated text
- Understand capabilities of neighboring PSAPs, counties, regions and/or states to determine how/if transferring of text is possible
- Train staff on the solution and functionality prior to testing and deployment
- Update policies and operational practices
- Prepare a public awareness and education campaign

Key Focus Points

- Determine deployment solution
- Engage vendors early and stay involved in the deployment process (180-day schedule upon readiness)
- Establish methods and procedures for handling Interim SMS Text-to-9-1-1
- Plan a public awareness campaign

Support References and Recommended Reading

For a copy of the interim SMS text-to-9-1-1 transfer testing plan, reference Appendix E.

NENA Interim SMS Text-to-9-1-1 Information and Planning Guide, Version 2, May 2014, https://c.ymcdn.com/sites/www.nena.org/resource/resmgr/Docs/SMS_Text_Info_and_Planning.pdf

NENA SMS Text-to-9-1-1 Resources for PSAPs and 9-1-1 Authorities, https://www.nena.org/?page=textresources

NENA Public Education Plan, https://c.ymcdn.com/sites/www.nena.org/resource/resmgr/Standards/NENA-REF-003.1-2015_Texting_.pdf

FCC PSAP Text-to-911 Readiness and Certification Form, https://www.fcc.gov/general/psap-text-911-readiness-and-certification-form

FCC Text to 911: What you Need to Know – A Consumer Guide,
https://www.fcc.gov/consumers/guides/what-you-need-know-about-text-911

FCC Text-to-911 Quick Facts and FAQs,
https://www.fcc.gov/consumers/guides/text-911-quick-facts-faqs

7. Appendices

A. Appendix A – Standards and Best Practices

B. Appendix B – Next Generation 9-1-1 (NG9-1-1) ESInet-To-ESInet Call Transfer Specifications

C. Appendix C – GIS Standards and Guidelines

D. Appendix D – National Address Database

E. Appendix E – Text-To-9-1-1 Transfer Test Cases

F. Appendix F – Minnesota 911 Standards, Protocols, Procedures

APPENDIX A – STANDARDS AND BEST PRACTICES

Next Generation 9-1-1 (NG9-1-1) Standards

These standards are notably the most critical to a standardized and interoperable NG9-1-1 service. The reader is encouraged to consult www.911.gov for the most current version of all related NG911 standards at the following link:

https://www.911.gov/project_standardsforenhancedandnextgeneration911.html

Entity	Standard or Document ID	Standard or Document Title	Standard or Document Description
NENA	NENA-STA-006.1-201X	*GIS Data Model for NG9-1-1*	Will define the GIS database model that will be used to support NG9-1-1 systems, databases, call routing, call handling, and related processes.
NENA	APCO NENA 2.105.1-2017 (Free)	*NG9-1-1 Emergency Incident Data Document (EIDD)*	Provides a standardized, industry-neutral National Information Exchange Model (NIEM) conformant (XML-based) specifications for exchanging emergency incident information to agencies and regions that implement NG9-1-1 and Internet Protocol (IP) based emergency communications systems.
NENA	NENA 08-002 v1 (Free)	*NENA Functional and Interface Standards for Next Generation 9-1-1 Version 1.0 (i3)*	Introduces the concept of an Emergency Services IP network (ESInet), which is designed as an IP-based inter-network (network of networks) shared by all agencies which may be involved in any emergency.
NENA	NENA 08-501 v1 (Free)	*NENA Technical Information Document on the Network Interface to IP Capable PSAP*	Provides technical information to guide manufacturers of network equipment and PSAP CPE in the development of IP-based interfaces between the network and PSAP CPE and to assist E9-1-1 Network Service Providers and PSAPs in implementing such interfaces.
NENA	NENA-INF-016.2.2018 (originally 08-506) (Free)	*NENA Emergency Services IP Network Design for NG9-1-1 (NID)*	Provides network architects, consultants, 9-1-1 entities, and state authorities with the information that will assist them in developing the requirements for and/or designing ESInets today that will be capable of meeting the requirements of an NG9-1-1 system.

Entity	Standard or Document ID	Standard or Document Title	Standard or Document Description
NENA	NENA 08-751 v1 (Free)	*NENA i3 Technical Requirements Document*	Specifies the requirements the i3 (Long Term Definition) Standard should meet.
NENA	NENA-INF-0.25.2-2017 (originally 53-507) (Free)	*NENA Virtual PSAP Management Operations Information Document (OID)*	Guides PSAP staff and policy makers in evaluating and considering the opportunities and challenges presented with NG9-1-1 systems as they relate to personnel and PSAP management.
NENA	NENA-STA-010.2-2016 (Free)	*NENA Detailed Functional and Interface Standards for the NENA i3 Solution*	Builds upon prior NENA publications including i3 requirements and architecture documents and provides a baseline to other NG9-1-1-related specifications.
NENA	NENA/APCO-REQ-001.1.1-2016 (Free)	*NENA/APCO Next Generation 9-1-1 Public Safety Answering Point Requirements*	Introduces requirements for an NG9-1-1 PSAP that is capable of receiving IP-based signaling and media for delivery of emergency calls conformant to the latest version of the NENA i3 Architecture document.
NENA	NENA-INF-003.1-2013 (Free)	*NENA Potential Points of Demarcation in NG9-1-1 Networks Information Document*	Identifies points of demarcation.
NENA	NENA-INF-007.1-2013 (Free)	*NENA Information Document for Handling Text-to-9-1-1 in the PSAP*	Provides a guideline for PSAPs with recommendations for emergency calling to 9-1-1 using text messaging.
NENA	NENA-INF-012.2-2015 (Free)	*NENA Inter-Agency Agreements Model Recommendations Information Document*	Provides a model recommendation for the development of mutual aid agreements and MOUs between PSAPs and affiliated or support organizations.
NENA	NENA-REF-002.2-2014 (Free)	*PSAP Interim Text-to-9-1-1 Support Documents*	Provides support information and education materials for PSAPs planning on moving forward with the interim solution for Text-to-9-1-1.

Entity	Standard or Document ID	Standard or Document Title	Standard or Document Description
NENA	NENA-REF-003.1-2015 (Free)	*NENA Text-to-9-1-1 Public Education*	Provides guidance when reaching out to local decision makers to educate them on NG9-1-1.
NENA	SMS Text-to-9-1-1 Resources for PSAPs & 9-1-1 Authorities (Free)	*SMS Text-to-9-1-1 Resources for PSAPs & 9-1-1 Authorities*	Provides public education guidelines, logos and planning strategies.
NENA	NG9-1-1 Public Education Plan for Elected Officials and Decision Makers (Free)	*Recommended NG9-1-1 Public Education Plan for Elected Officials and Decision Makers*	Provides guidance when reaching out to local decision makers to educate them on NG9-1-1 basics and the need to address funding, legislative and regulatory issues to enable the transition to NG9-1-1.
NENA	NENA-INF-006.1-2014 (Free)	*NENA NG9-1-1 Planning Guidelines Information Document*	Provides guidance to help 9-1-1 Authorities create a smooth, timely and efficient transition plan to accomplish implementation of NG9-1-1.

APPENDIX B – NEXT GENERATION 9-1-1 (NG9-1-1) ESINET-TO-ESINET CALL TRANSFER SPECIFICATIONS

Scope:

This document highlights the ability to transfer a 9-1-1 call with supporting data between jurisdictional public safety authorities that have their own contracted ESInet services. Specific interest is in demonstrating this capability between state entities. Call transfers are initiated by a PSAP call-taker that has determined the call needs to be sent to a specific PSAP in another ESInet.

These requirements are not meant to be exclusive to NENA i3 functional solution methods. Other means of accomplishing these functional scenarios are acceptable as an interim solution to NENA i3 capabilities being available, and they are consistent with the viability in the operations and business environment. This section discusses fully NENA i3 compliant call transfer and transitional transfer, including an ESInet-connected legacy PSAPs.

The following requirements are out of scope:

- Specific PSAP CPE capabilities to initiate the call transfer
- The interaction model between a given PSAP CPE and the controlling ESInet
- ESInet capabilities to interface with their served PSAPs

The general goal is meant to keep the target capabilities transparent to the PSAP, whether the PSAP is legacy, transitional, or a NENA i3 PSAP. However, as stated above, the interaction between PSAP and the ESInet that serves that PSAP is out of scope of this document.

Assumptions:

a) Each ESInet will accept incoming 9-1-1 calls and deliver those calls to a participating PSAP, as illustrated in the figure below (ingress call answered at PSAP A). The functional scenarios within this document have as a precondition that the call has been delivered to PSAP A.
b) Physical IP transport is established between the serving networks (ESInets).
c) Data formats will adhere to NENA i3-specified formats for data exchange during call setup (e.g., caller location information).
d) Each ESInet will establish security mechanisms appropriate for covered transactional scenarios.
e) Any reference to “call transfer” implies a “call bridge” function where all parties are initially participating in a conference bridge.
f) Call hand-offs (forwarding the initial call) between ESInets are out of scope. Only call transfers are in scope where the call has been answered by a PSAP.

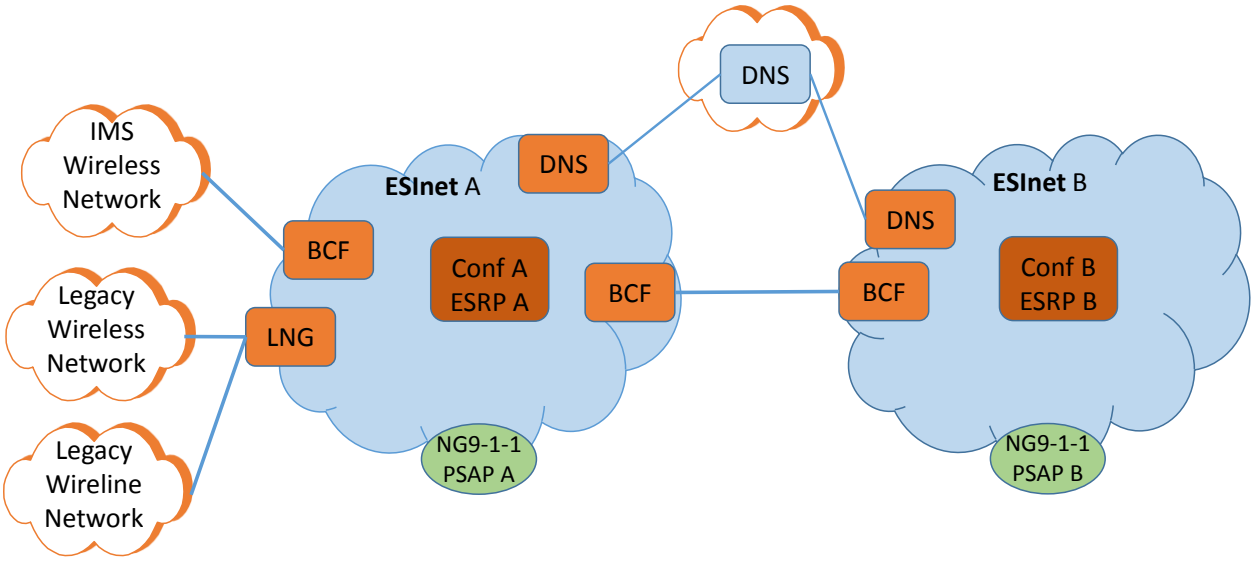

Figure B-1: Baseline Network Solution Context Diagram

The two transfer methods are shown in the figures below.

Fully NENA i3-Compliant Transfer Model

Figure B-1 shows the transfers using those concepts defined in NENA i3. Once a call-taker determines that a call must be transferred, the CPE issues a REFER message to Conference A. In that REFER message is a link to the EIDD that PSAP B may use to dereference the caller's location and additional data. ESInet A then sends the call to ESInet B, which forwards the call to PSAP B. PSAP B queries PSAP A (via an EIDD dereference) to obtain location information (returned as location by value or location by reference) and any additional information. Specific call flows are shown below.

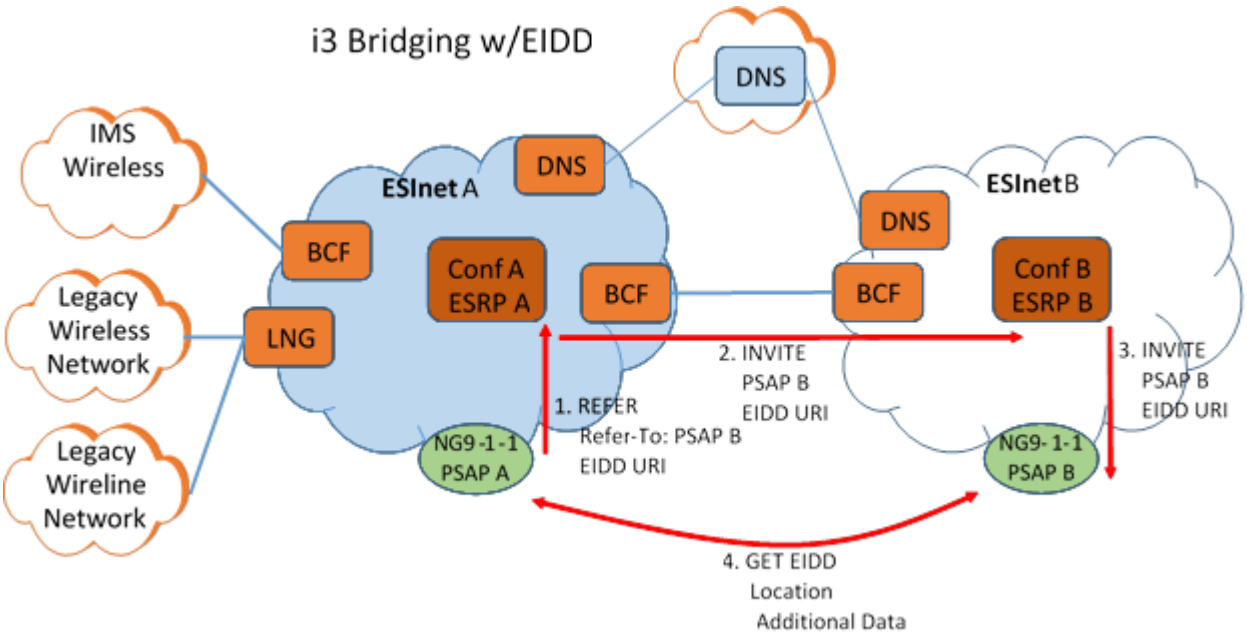

Figure B-2: Fully NENA i3-Compliant Transfer Method

Transitional Transfer Model

Figure B-2 shows the general concept of transfer using the transitional method. Once a call-taker determines that a call must be transferred, the CPE issues a REFER message to Conference A. ESInet A determines the location method and includes that in a geolocation header (location by value or location by reference). ESInet A then sends the call to ESInet B, which forwards the call to PSAP B. PSAP B then uses the geolocation header to obtain location information (location by value or location by reference) and any additional information. Specific call flows are shown below.

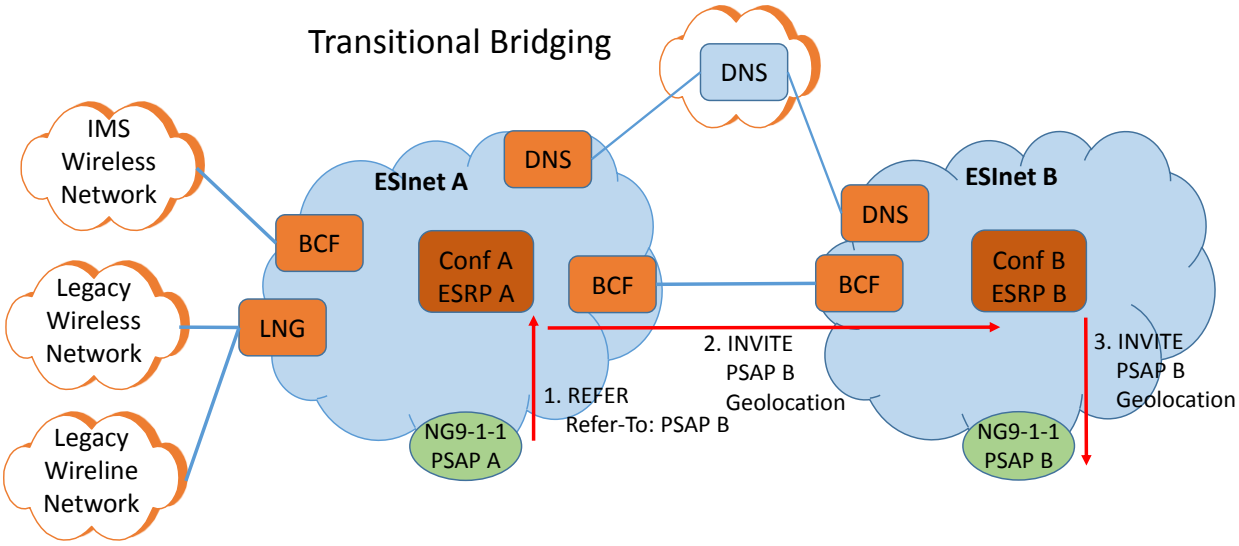

Figure B-3: Transitional Bridging Method

Requirements

1.0 Conform to NENA and ATIS standards (methods, protocols) where standards exist, are applicable and are economically feasible as determined by state 9-1-1 jurisdictions.

2.0 Consider non-standard solutions where real-world situations do not allow a "desirable" function to be accomplished and standards are not available that match the situation.

- 2.1 Identify paths from legacy or workaround approaches to the future state as defined by the NENA i3 model.
- 2.2 Anticipated timelines to move from transition to NENA i3 compliant.

3.0 Define a staged deployment strategy that addresses the operational realities of specific call types:

- 3.1 Legacy wireless (initial scope)
- 3.2 Wireline (initial scope)
- 3.3 IP Multimedia Subsystem (IMS) wireless (future)
- 3.4 Voice over IP (VoIP) (future)
- 3.5 Text messaging (future)

4.0 Call Type (class of service), and Carrier ID in Session Initiation Protocol (SIP) messaging data structures MUST be identified and conveyed within "Additional Data Elements" contained with the SIP INVITE message.

5.0 PSAP addressing and Pilot telephone numbers (TNs) MUST be replaced by PSAP uniform resource identifiers (URIs)

6.0 The SIP interface between transferring ESInets MUST conform to the NENA i3, ATIS 0700015 and RFC 4904 standards

- 6.1 Location information for the fully compliant NENA i3 transfer method will be conveyed between ESInets via a reference to an Emergency Incident Data Document (EIDD) per APCO/NENA 2.105.1-2017. The EIDD will contain either the location in a Presence Information Data Format – Location Object (PIDF-LO) data structure or a reference identifier (location URI) pointing to the location.

For the transitional bridging method, the geolocation header that is conveyed will include:

- Location by value – Location included with SIP messaging. SIP location conveyance per RFC 6442
- Location by Reference – Location made available by providing, within SIP messaging, a reference identifier that identifies the target entity and the location object to retrieve, i.e., a reference identifier (URI) to a location server using a HTTPS[46] scheme (HELD[47] – RFC 5985) to retrieve location encoded in PIDF-LO RFC 6442 and RFC 5139.

7.0 Each ESInet (ESInet A and ESInet B) is responsible for providing the call signaling and location information delivery interface to the PSAPs that they each support. At a minimum, legacy PSAP interconnections (CAMA trunks and ALI links) and i3 PSAP interconnections (via SIP and HTTPS/HELD) are to be supported.

8.0 ESInet providers mutually will agree to a set of URIs that map to the set of PSAPs that will participate in call-transfer scenarios.

9.0 After the call bridge has been established between PSAPs, any party may drop from the bridge at any time, including the caller or bridge that initiated the conference.

10.0 Security Requirements

10.1 Transport Layer Security (TLS) certificate-based mutual authentication MUST be implemented. Coordination of obtaining and maintaining appropriate digital certificate to be mutually agreed upon by ESInet providers.

11.0 Wireline calls

11.1 Location Update – out of scope for wireline calls. No specific capability for updating a wireline call's location information is required.

11.2 Functional Scenario – Wireline Call

(1) Call is received at initial ESInet and routed to a given PSAP A

(2) PSAP A initiates a call bridge to PSAP B by signaling Call Routing Function (incorporates ESRP and Conference A as shown in the figures) and providing a descriptor that is mapped to ESInet B and PSAP B (PSAP B descriptor). The PSAP descriptor can be in the form of a Pilot TN or URI, to be determined through mutual agreement of the 9-1-1 service providers. In the fully compliant NENA i3 method, the PSAP will include a reference to the EIDD.

(3) For the transitional method, the Call Routing Function A retrieves location information for the 9-1-1 call and structures it into the PIDF-LO format

(4) Call Routing Function A sends a SIP invite message to ESInet B

(a) For the fully NENA i3 method, the Call Routing Function will forward the EIDD reference provided by the PSAP.

(b) For the transitional method, the Call Routing Function will include a geolocation header containing a PIDF-LO data structure, e.g., location by value.

(5) Call Routing Function B uses the PSAP B descriptor and initiates a call to PSAP B, if possible per PSAP availability and routing rules. Otherwise, a busy message is delivered to ESInet A.

(a) For the fully NENA i3 method, the Call Routing Function passes the reference to the EIDD.

[46] Hypertext Transfer Protocol Secure.
[47] HTTP-Enabled Location Delivery.

(b) For the transitional method, it includes the geolocation header with location by value.

(6) After successful SIP signaling, Call Routing Function B and Call Routing Function A establish an audio path between the associated call parties (caller, PSAP A and PSAP B).

(7) For the fully NENA i3 method, PSAP B queries PSAP A for the EIDD containing the caller's location and additional data. For the transitional method, PSAP B has now received call and caller location information. PSAP B can perform appropriate PSAP CPE functions.

12.0 Legacy Wireless calls

12.1 Location Updates

- For the NENA i3 method, the EIDD will contain the location by reference information that the PSAP may use for the location update.
- For the transitional method, the geolocation header will contain the location by reference information that the PSAP may use for the location update.

12.2 Functional Scenario – Wireless Call

(1) Call is received at initial ESInet and routed to a given PSAP A

(2) PSAP A initiates a call bridge to PSAP B by signaling Call Routing Function A and providing a descriptor that is mapped to ESInet B and PSAP B (PSAP B descriptor). The PSAP descriptor can be in the form of a Pilot TN or URI, to be determined through mutual agreement of the 9-1-1 service providers.

(3) Call Routing Function A will send a SIP invite message to ESInet B with location by reference information.

(i) For the fully NENA i3 method, the Call Routing Function passes the reference to the EIDD, which contains the location by reference information that may be used to acquire the location.

(ii) For the transitional method, it includes the geolocation header with the location by reference information.

APPENDIX C – GIS STANDARDS AND GUIDELINES

GIS Standards and Guidelines

Compliance with NENA-recommended standards and guidelines is strongly encouraged. States, regions and PSAP authorities are encouraged to monitor NENA's website for the most current document updates and release of draft standards or guidelines that may be distributed for public comment.

- **NENA Standard for NG9-1-1 GIS Data Model, NENA-STA-006.1-201X,** Month Day, Year
  This standard defines the Geographic Information Systems (GIS) Data Model, which supports the NENA Next Generation 9-1-1 (NG9-1-1) systems of location validation and both geospatial call or dispatch routing. This is the standard to be referenced by GIS practitioners. This model also defines several GIS data layers used in local PSAP and response agency mapping applications for handling and responding to 9-1-1 calls.

- **NENA Next Generation 9-1-1 Data Management Requirements, NENA-REQ-002.1-2016**, March 10, 2016
  This document defines discrepancy and performance reports associated with processes within the NG9-1-1 system. The intent of the document is to provide 9-1-1 authorities, vendors, communication service providers (CSP), and other interested parties with guidelines for communicating issues or status of various elements within the system.
  http://www.nena.org/resource/resmgr/Standards/NENA-REQ-002.1-2016_NGDataMg.pdf

- **NENA Standards for the Provisioning and Maintenance of GIS data to ECRF and LVFs, NENA-STA-005.1-2017**, February 16, 2017
  This document defines operational processes and procedures necessary to support the Emergency Call Routing Function (ECRF) and Location Validation Function (LVF), which are NGCS functional elements. Additionally, this document identifies ECRF/LVF performance and implementation considerations for 9-1-1 authorities' consideration.
  http://www.nena.org/resource/resmgr/standards/NENA-STA-005.1.1-2017_ECRF-L.pdf

- **NENA Standard for NG9-1-1 Additional Data, NENA-STA-012.2-2017 (originally NENA 71-001),** November 29, 2017
  With the implementation of NG9-1-1 there will be many forms of additional data available to telecommunicators and emergency responders beyond the primary call data from SIP INVITE, the primary street address and/or geodetic location data. This document defines how to populate the additional data structures to describe three entities commonly associated with an emergency call.
  http://c.ymcdn.com/sites/www.nena.org/resource/resmgr/standards/NENA-STA-012.2_AddlData_2017.pdf

- **NENA Standard for United States Civic Location Data Exchange Format (CLDXF) Standard,** March 23, 2014
  The NENA NG9-1-1 CLDXF standard supports the exchange of United States civic location address information about 9-1-1 calls, both within the U.S. and internationally. This standard covers civic location addresses within the U.S., including its outlying territories and possessions, and defines the detailed data elements needed for address data exchange.
  http://www.nena.org/?NG911CLDXF

- **NENA Information Document, NENA-INF-012.2.2015 Inter-Agency Agreements**
  The purpose of the NENA Inter-Agency Agreements Model Recommendations is to provide rationale and guidance for the development, promulgation and implementation of agreements between public safety communications, affiliated agencies and private entities to share information and resources as needed to provide the highest level of service to the citizens. It is the intent of this document to provide sample templates that PSAPs can utilize to create agreements that meet the needs of their agency.
  https://www.nena.org/resource/resmgr/Standards/NENA-INF-012.2-2015_InterAge.pdf

- **Other Standards, Guidelines and Resources**

  SAFECOM Writing Guide for a Memorandum of Understanding (MOU)
  This tool focuses on the governance element of the SAFECOM Interoperability Continuum and is specifically aimed to help communities interested in establishing formal agreements, such as MOUs, to address multi-organization coordination and communications.
  https://www.dhs.gov/sites/default/files/publications/Writing%20Guide%20for%20a%20Memorandum%20of%20Understanding_0.pdf

  Smoother Sailing to NG9-1-1, NSGIC's Top Ten List for State GIS Coordinators
  NSGIC's NG9-1-1 Work Group developed this list of actions that can be used to effectively engage the 9-1-1 community.
  https://nsgic.memberclicks.net/assets/docs/NG911docs/NG_911_Top_Ten_State_Coordinator_081811_Final.pdf

  Next Generation 9-1-1: Working Smarter Together
  Collaboration, planning and effective coordination are essential activities that can build trust among agencies. Those most involved with the operation of the PSAPs are spending many thousands of hours planning for improvements that will usher in NG9-1-1 services and they are doing an outstanding job. The concepts introduced in this document compliment these efforts.
  https://nsgic.memberclicks.net/assets/docs/NG911docs/working_smarter_together_nena_napsg_nsgic_081211_final.pdf

APPENDIX D – NATIONAL ADDRESS DATABASE

The U.S. Department of Transportation (USDOT) and its partners from all levels of government recognize the need for a National Address Database (NAD). Accurate and up-to-date addresses are critical to transportation safety and are a vital part of Next Generation 9-1-1 (NG9-1-1). They are also essential for a broad range of government services, including mail delivery, permitting, and school siting. To date, there has been no national database of address points in the public domain. In many cases, such data already exists at the state and/or local level, and USDOT believes that a NAD can be built starting at the state and local level and aggregating up to the national level.

In April 2015, USDOT hosted the National Address Database (NAD) Summit. The Summit convened stakeholders from all levels of government and the private sector to identify the possible alternatives for developing a NAD with the pros and cons of each alternative identified based on real use case examples that currently are in place. The Summit confirmed USDOT's belief that a NAD can be built from data collected at the state and local level. Based on recommendations from that Summit, USDOT secured funding to sponsor a NAD pilot project, which kicked off in October 2015.

The pilot project focused heavily on identifying a minimum data content guideline for the NAD. To assist in this, address data schemas and workflows from ten states and four counties/cities were examined. From this effort, a minimum content guideline and associated data schema were developed and then reviewed by Summit attendees. Comments were incorporated or adjudicated, and the final guideline, schema, and geodatabase template were published in spring 2016. Once this was completed, address datasets were received from Arkansas, Arizona, and Boone County, Missouri. The pilot project team then developed Extract, Transform, Load (ETL) scripts to load this data into the new schema. In addition, seven additional states (Colorado, Connecticut, Montana, New Jersey, Ohio, Utah, and Virginia), the District of Columbia, and ten additional Missouri cities/counties have volunteered to develop their own ETLs in order to include their data in the NAD.

Although the NAD effort went dormant after the conclusion of the pilot project due to a lack of resources, USDOT was able to secure funding and continue NAD development in summer 2017. To date, the NAD has received data from 21 partner states. An additional five states are committed partners, but have not yet delivered data.

By integrating local and state efforts into developing and maintaining a NAD, it is hoped that the nation will have consistent and current address data that could be used by all levels of government for public safety, emergency response, community aid after catastrophes occur, highway safety, and the delivery of many other services to benefit the public.

The availability of a standardized address database has further benefit regarding response time. The overwhelming majority of Enhanced 911 (E9-1-1) calls are received from cellular telephones. Callers, particularly those traveling roadways at night, often do not know their location. The ability to reference a caller's location, as captured by almost all E9-1-1 systems, with respect to a known, standardized address, would be of tremendous value to the emergency responder community. Such an address

reference, when included with dispatch information, could improve response times. The need for accurate GIS data is understood at the local and state level emergency communications and response agencies.[48]

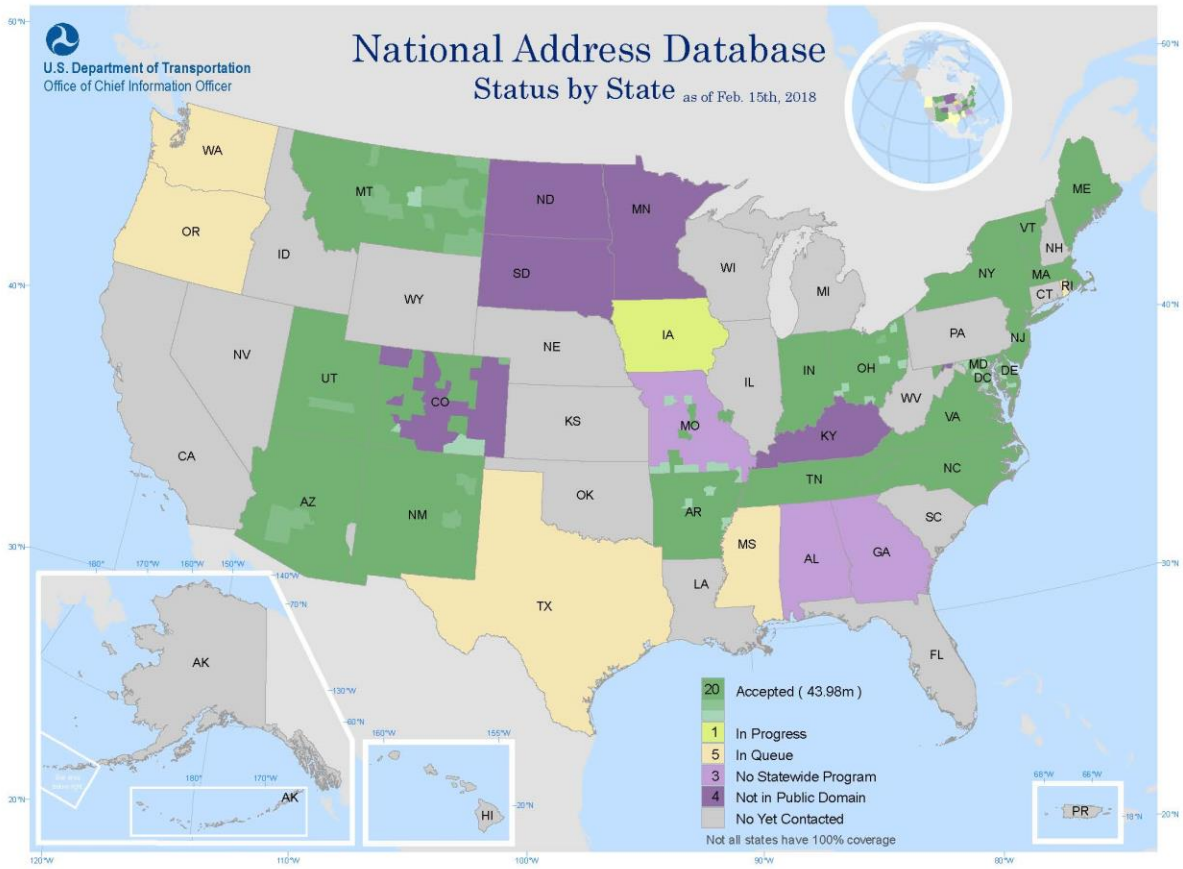

[48] https://www.transportation.gov/nad

APPENDIX E – TEXT-TO-9-1-1 TRANSFER TEST CASES

In recognition of the interstate relationships and operational support in place between PSAPs in neighboring states, the Interstate Playbook team recognized that with the deployment of text-to-9-1-1, interstate text transfers were going to be needed. As such, team worked to develop text-to-9-1-1 test case criteria and scenarios to ensure the ability to transfer text messages between PSAPs in neighboring states. The initial focus of the test cases was on transfers between Minnesota and North Dakota.

When preparing and testing text-to-9-1-1 between PSAPs and states, it is important to understand the CPE type and software version at the PSAPs, as well as the type of transfer being initiated, either inter- or intra-TCC provider. The testing must be coordinated between PSAPs, TCC providers, and CPE vendors to ensure that support is available to troubleshoot any issues that arise during testing.

At this time, inter-TCC text transfers are not available; however, as this capability and text-to-9-1-1 service becomes available in other neighboring states, the CPE combinations as well as the test types will be updated to take into account additional scenarios. In the case of Minnesota and North Dakota, they were testing primarily between VESTA and VIPER equipment and both utilize West as the TCC, so the type of text transfer was intra-TCC SMS text transfer.

The test cases identified to verify text transfers between PSAPs in neighboring states included the combinations provided in the chart below.

*Note: The only tests successfully completed at the time of this writing were the first two CPE combinations between Red River Regional Dispatch and Beltrami County.

Test Case	Originating PSAP	Originating Equipment	Terminating PSAP	Terminating Equipment	Type	Testing Criteria	Testing Details
VIPER to VESTA	Red River Regional Dispatch (ND)	VIPER	Beltrami PSAP – NW Region (MN)	VESTA	Intra-TCC SMS Text Transfer	1) Transfer text from RRR to Beltrami 2) Transfer text from RRR to Beltrami and back to RRR 3) Private text available between RRR and Beltrami	1) Date: 2) Time: 3) Test Results: 4) Comments:
VESTA to VIPER	Beltrami PSAP – NW Region (MN)	VESTA	Red River Regional Dispatch (ND)	VIPER	Intra-TCC SMS Text Transfer	1) Transfer text from Beltrami to RRR 2) Transfer text from Beltrami to RRR and back to Beltrami 3) Private text available between Beltrami and RRR	1) Date: 2) Time: 3) Test Results: 4) Comments:
***VIPER to VIPER**	Red River Regional Dispatch (ND)	VIPER	Mille Lacs PSAP – Central Region (MN)	VIPER	Intra-TCC SMS Text Transfer	1) Transfer text from RRR to Mille Lacs 2) Transfer text from RRR to Mille Lacs and back to RRR 3) Private text available between RRR and Mille Lacs	1) Date: 2) Time: 3) Test Results: 4) Comments:
***VESTA to VESTA**	Cavalier County 911 (ND)	VESTA	Beltrami PSAP – NW Region (MN)	VESTA	Intra-TCC SMS Text Transfer	1) Transfer text from Cavalier to Beltrami 2) Transfer text from Cavalier to Beltrami and back to Cavalier 3) Private text available between Cavalier and Beltrami	1) Date: 2) Time: 3) Test Results: 4) Comments:

APPENDIX F – MINNESOTA 911 STANDARDS, PROTOCOLS, PROCEDURES

Minnesota 911 Standards, Protocols, Procedures

Text -to-911 Statewide Operational Standards[49]

Document Section 1	**9-1-1 Call Handling**	**Status**: Complete
SECB Standard Number	**1.3.0**	
Standard Title	**Text-to-9-1-1 Statewide Operational Standard**	
Date Established	**11/30/2017**	**SECB Approval**: 11/30/2017
Replaces Document Dated		
Date Revised		

1. <u>Purpose or Objective</u>

The purpose of this operational standard is to standardize the method of receiving and processing Short Message Service (SMS) text-to-9-1-1 calls throughout the State of Minnesota. Use of this operational standard will promote the standardization of text-to-9-1-1 call handling among jurisdictions across the state. The purpose of text-to-9-1-1 is to provide a means of communication between the caller and the Public Safety Answering Point (PSAP) when it is not feasible for callers to make a traditional voice call.

2. <u>Background</u>

- **Capabilities**

PSAPs that have Customer Premise Equipment (CPE) capable of handling text-to-9-1-1 calls and is directly connected to the statewide Emergency Services IP Network (ESInet) will be allowed to take text-to-9-1-1 calls after they submit a 9-1-1 Plan Change letter to the Minnesota Department of Public Safety (DPS), Emergency Communication Networks (ECN) Division. Each position in the PSAP should have the ability to process all calls that require the use of SMS text-to-9-1-1 calls.

- **Constraints**

Constraints of text-to-9-1-1 include caller location accuracy. Text-to-9-1-1 provides the geographical coordinates of the cell sector centroid to the PSAP. This provides a comparable accuracy factor to that of phase one wireless data.

Text messaging to 9-1-1 is a best-effort service that utilizes the public SMS text network. As with any SMS texts, there is no guarantee on the speed of delivery, or if the SMS message will be delivered at all. SMS messages may also appear out of order. Accordingly, it may take longer for a call taker to process an SMS text to 9-1-1 request than a traditional 9-1-1 voice request, which, in turn, may lengthen the public safety response time.

When the caller's phone is in roaming mode, the text will not go through to the PSAP. They will receive a bounce-back message telling them to dial 9-1-1.

The call taker should consider keeping the session open until responders have made contact with the caller. This will allow for gathering additional information if necessary.

[49] Text-to-9-1-1 Operational Standard SECB 9-1-1 Standard 1.3.0 Approval 11-30-2017

Before the call is released, a message should be sent to the caller indicating that the session will be ending. A text-to-9-1-1 session cannot be restored or initiated unless the caller messages 9-1-1 again in a new session.

3. <u>Operational Context</u>

Callers who find themselves in a situation where they are only able to text, or individuals who are hearing or speech impaired, may opt to use text-to-9-1-1. Voice communication is still the preferred medium to reach 9-1-1 and will be promoted as such throughout the state.

4. <u>Recommended Protocol/ Standard</u>

A) Text-to-9-1-1 Call Processing Considerations

1. Calls received via SMS messaging will come into the PSAP on a designated queue.

2. The text message screen will show the latitude/longitude of the centroid of the cell sector (similar to wireless phase 1), not the location of the caller. The call taker can rebid the location information if necessary. Location information may or may not improve with a rebid. To rebid, the call taker must enter the command #L into the text box and send it.

3. Due to limitations with SMS messaging, messages shall be limited to 160 characters before sending the message. If the caller goes over 160 characters, the call will be broken up into multiple messages. It is possible for the messages to arrive out of order.

4. Call takers will process all text-to-9-1-1 messages with the same priority as they do with all other 9-1-1 calls.

5. The PSAP should have a generic opening message that does not identify the PSAP in order to avoid confusion since regional PSAPs are being used to take texts for other agencies.

B) Text-to-9-1-1 Call Processing

1. The address or location must be verified on all text-to-9-1-1 calls as well as the phone number the text is coming from. A mistyped or autocorrected street name by the caller may provide the call taker with a wrong address.

2. The call taker should ask the caller if they can call in by voice (if it is safe to do so), unless it is made clear from the onset of the call that the caller is only able to communicate via text.

3. It is recommended that PSAPs have an alternative option for initiating outbound texts, such as a PSAP cellular telephone, for situations where additional information may be needed and the text session was terminated.

- If an alternative option is utilized, a general “do not reply” disclaimer should be used. (i.e. CAUTION- DO NOT REPLY TO THIS NUMBER – Please call 9-1-1 if assistance is needed. This telephone is not monitored or used to reach 9-1-1.)

4. The caller will receive a “Dialog has been closed by 9-1-1” message when the call taker releases the call.

5. If the PSAP does not answer the call within 30 seconds, the Text Control Center (TCC) may terminate the call and send the caller a message asking them to call and advise that 9-1-1 was unreachable. This varies according to the CPE that the PSAP uses.

6. After 30 minutes of no activity in the session, the TCC will close the 9-1-1 text session and send the caller a message advising that the 9-1-1 dialog has been closed.

C) Relaying a Text to Another PSAP Without Texting Capabilities

1. If a text message is received and it is determined that the emergency is occurring in another jurisdiction, all pertinent information will be gathered and relayed by phone, radio, or whatever means the PSAP has to the appropriate PSAP for dispatch if that PSAP does not have text-to-9-1-1 capabilities.

2. The appropriate PSAP will be notified of the incident as soon as the receiving PSAP is able taking into consideration factors such as the nature of the situation, priority, and when the call taker has adequate information.

3. The text session should be kept open until it is appropriate to release the call in case additional information is needed.

4. The PSAP should document the text-to-9-1-1 call according to their PSAP Standard Operating Procedures (SOPs).

5. At no point should the caller be advised that they have reached the wrong PSAP and need to dial a different number to reach the correct PSAP.

6. All text-to-9-1-1 calls will be recorded and archived the same way as a voice 9-1-1 call.

D) Transfer of Text-to-9-1-1 Calls

1) If the incident needs to be transferred to another PSAP that is capable of receiving SMS messages, the call taker will transfer the text-to-9-1-1 call through the TCC to the receiving PSAP.

2) When the originating PSAP drops off during a transfer conference, the caller may receive a disconnect message. It is recommended that the transferring PSAP maintain the three-way conversation and not drop off or send the caller a message saying there will be a disconnect message. When transferring a text call, the transferring PSAP will advise the caller which PSAP they are being transferred to and relay pertinent details in order to ensure a successful transfer.

3) The TCC transfers using the #T command along with a PSAP transfer code. The receiving PSAP will receive the caller’s location and telephone number information.

4) The PSAP can use the private chat feature (#P) PSAP-to-PSAP in order to communicate sensitive information without the caller's knowledge.

5) If the PSAP is not able to transfer the text, the call taker will take pertinent information and relay to the appropriate PSAP. Once the initial response information has been exchanged, the agencies involved may choose to designate a talkgroup for continued incident communication or use telephone to relay incident updates.

5. <u>General</u>

1. Pre-set messages are available and configurable according to agency protocol. The use of pre-set messages is recommended.

2. When pre-set messages are being used, the following order of questioning should be used at the beginning of a text session:

- What is your location?
- Can you place a voice call?

3. If there is no response from the caller, the call taker will attempt to contact the caller by sending a text message back. If there is still no response, the call taker will leave the text session open and allow it to expire.

- If there is an indicated emergency in the initial message with an unknown location, the call taker must use other methods in an attempt to locate the caller including: rebidding the location, contacting the carrier for pinging the phone for better location information, or retrieving subscriber information. The call taker may also place a voice call to the caller in order to obtain critical information. However, if the initial message indicated an emergency where a callback could compromise the safety of the caller, the call taker will exhaust other methods in order to locate the caller first.

4. If subscriber information is needed, the call taker should contact the appropriate carrier for that information similar to the process for a wireless caller. If the carrier is unknown, contact one of carriers to find out which provider the caller used.

5. Call takers should avoid the use of texting lingo. The call taker should only use plain language. The call taker should not use emojis when messaging a caller.

6. If the call taker experiences a language barrier with the caller, the call taker should first determine if the communication barrier is due to texting lingo by asking the caller "can you use plain English?" If it is determined that Language Line services are needed, a conference call will be established according to the agency's protocol.

7. If the PSAP is unequipped to get their own transcripts for text calls, the call taker or supervisor should create a request to the West TCC to get that information.

6. <u>Management</u>

The Statewide Emergency Communications Board (SECB) Next Generation 9-1-1 Committee (NG9-1-1) is responsible for the oversight of the standard. It is required that PSAP managers implement this standard and train their personnel accordingly.